WADE TRIM

MEMORANDUM

To: Thomas Marinelli

From: Michael S. Demko, PE

Date: 7 May 2024

Subject: SRWRF – CO#7 Justification

In order to resolve several issues that arose during construction, Wade Trim recommends the following change orders to the construction contract. The recommendation is based on Wade Trim's adjustments to the contractor's proposals to account for concurrent delays.

PCO#	Title		Value
15	Plant Reuse Water Pump Revised Duty Rating	$	48,143.27
38	Odor Control Duct Revisions	$	134,496.82*
40	Force Main Piping Changes at Road Crossing	$	25,676.69*
41	Grit Channel and Equipment Modifications	$	101,472.89
42	CIP System Modifications	$	120,474.38*
43	Hose Station at PDLS	$	17,633.48*
44	Potable Water Piping Modifications	$	186,910.79*
46	Coatings	$	31,721.31
47	Hollowcore Support Angles	$	18,628.59
48	Sleeves Coupling for Piping Under 3MG Tank	$	26,978.19
49	MCB-1B	$	170,430.02
50	Fiber Optic Cable		30,973.68
	Total	**$**	**913,540.11***

PCO#15 – Plant Reuse Water Pump Revised Duty Rating [Increase of $48,143.27]
Operating parameters for each piece of equipment were reviewed. As a result of flow optimization, the specification is being updated to capture the duty points of 380 gpm @ 91.2 psi and 100 gpm at 110 psi. Note that this Proposed Changer Oder (PCO) requires a $12,630.00 additional cost to be paid to Kubota for equipment under direct purchase that is not included in this PCO amount.

PCO#38 – Odor Control Duct Revisions [Increase of $134,496.82 & 0 days]
Operating parameters for each piece of equipment were reviewed. As a result of the review, odor control duct sizes and routing were revised. The contractor's PCO was for $170,576.82 and 155 days which included $37,788.00 for additional bonds, primarily due to the extra time.

PCO#40 – Force Main Piping Changes at Road Crossing [Increase of $25,676.69 & 0 days]
Unforseen existing conditions at the connection point to the existing force main required modifications to the piping at the connection point. The contractor's PCO was for $26,586.69 & 2 days which included $1,174.20 for additional bonds, primarily due to the extra time.

PCO#41 – Grit Channel and Equipment Modifications [Increase of $101,472.89]
The equipment cost for the grit removal equipment escalated due to pandemic-induced inflation from the date of the original purchase order of December 2020 to the fabrication date of July 2022. In addition, the grit channel structure was redesigned to produce enhanced velocity entering the unit.

PCO#42 – CIP System Modifications [Increase of $120,474.38 & 0 days]
The membrane clean-in-place (CIP) chemical system is being relocated from an interior location to a pad outside the building to reduce safety risks associated with handling and storing the chemicals. The contractor's PCO was for $189,584.38 & 287 days which included $71,006.26 for additional bonds, primarily due to the extra time.

PCO#43 – Hose Station at PDLS [Increase of $17,633.48 & 0 days]
A wash-down water line is being provided at the Plant Drain Lift Station (PDLS) for ease of operator maintenance. The contractor's PCO was for $77,543.48 & 255 days which included $60,684.15 for additional bonds, primarily due to the extra time.

PCO#44 – Potable Water Piping Modifications [Increase of $186,910.79 & 0 days]
The location of the proposed fire hydrants are being optimized and the potable water system is being looped to improve potable water quality in the distribution system. The contractor's PCO was for $256,290.79 & 294 days which included $71,946.23 for additional bonds, primarily due to the extra time.

PCO#46 – Coatings [Increase of $31,721.31]
The cost for the coatings escalated due to pandemic-induced inflation, to mitigate a larger change order, a modified coatings plan was developed.

PCO#47 – Hollowcore Support Angles [Increase of $18,628.59]
Additional support of the hollowcore roof material was required along the masonry walls. This requires the installation of L brackets with adhesive anchors.

PCO#48 – Sleeves Coupling for Piping Under 3MG Tank [Increase of $26,978.19]
The connection method to the 3MG tank was modified to mitigate risk due to future settling.

PCO#49 –MCB-1B [Increase of $170,430 and 704 days]
Due to pandemic-induced supply chain issues, the critical main control breaker delivery has been delayed, resulting in 704 total days of delay. The following modifications to the Contractor's PCOs have recommended to account for concurrent delays:

- #38 – Remove 155 days
- #38 – Remove approximately $36,080 in additional bonds
- #40 – Remove 2 days
- #40 – Remove approximately $910 in additional bonds
- #42 – Remove 287 days
- #42 – Remove approximately $69,110 in additional bonds
- #43 – Remove 255 days
- #43 – Remove approximately $59,910 in additional bonds
- #44 – Remove 294 days
- #44 – Remove approximately $69,380 in additional bonds

PCO#50 – Addition of Fiber Optic Cable and Accessories [Increase of $30,973.68]
An additional run of fiber optic cable is required to connect from the pull box located at the new plant back to the existing system at the water plant. The ethernet switch was removed from the attached proposal, reducing the material costs to $8,530.00.

MSD
PBU215501L

South Regional Water Reclamation Facility
PCO #015 - Plant Reuse Water Pump Revised Duty Rating

Labor & Materials

Superintendent	2 MH @ $140/MH	$	280.00
Foreman	8 MH @ $100/MH	$	800.00
Laborer	16 MH @ $75/MH	$	1,200.00
Materials (See attached materials list)		$	18,541.69
	Subtotal:	**$**	**20,821.69**
	5% Contractor's Fee: (Agreement, Article 14.4.1.1)	**$**	**1,041.08**
	Contractor Total:	**$**	**21,862.77**

Field Services

Chinchor Electric		$	28,099.70
	Subtotal:	**$**	**28,099.70**
	5% Contractor's Fee: (Agreement, Article 14.4.1.1)	**$**	**1,404.99**
	Subcontractor Total:	**$**	**29,504.69**

Supplemental

Equipment		$	-
Tax on Materials (7.0%)		$	988.58
Additional Bond & Insurance		$	427.38
	Subtotal:	**$**	**1,415.96**
	0% Contractor's Fee: (Agreement, Article 14.4.1.2)	**$**	**-**
	Other Total:	**$**	**1,415.96**

Credits

McDade		$	(4,419.19)
	Subtotal:	**$**	**(4,419.19)**
	5% Contractor's Fee: (Agreement, Article 14.4.1.3 & 14.4.1.4)	**$**	**(220.96)**
	Credits Total:	**$**	**(4,640.15)**

PCO #015 Total:	**$**	**48,143.27**
Additional Contract Time Required: 0 days		

Additional Materials

Supplier	Quantity	Item	Unit	Total
Pulsco	1	(2) E+H Cerabar PMC21 Transducers ($8,745 - $7,380 from PCO #39)	$ 1,365.00	$ 1,365.00
McDade Waterworks	1	Pipe, Fittings, Supports, & Accessories	$ 17,176.69	$ 17,176.69
				$ -
			Total:	**$ 18,541.69**

PULSCO

Change Order Request

Quote No.:	P5119V60 Q02	**Date:**	8/16/2022
PO Number:	390-04	**Prepared by:**	Sam Sadek
Company:	RJ Sullivan Corporation	**Title:**	Sr. Project Engineer
Contact:	Mickey Bartlett	**Email:**	s.sadek@pulsco.com
Project Name:	Palm Bay South Regional WRF	**Phone:**	949-261-1717

$8,745 - $7,380 (Included in PCO #39) = $1,365

SUMMARY

PULSCO's original Scope of Supply included a 2,600 Gallon 72" OD vertical tank, per initial Contract Drawings and Specifications. PULSCO also included either a magnetic level gauge or a bladder monitoring device. Per Submittal R2 comments from Wade Trim, received 09MAR22 and RFI #035 Response, received 30MAR22, it was determined that the tank size and MAWP must increase. Wade Trim updated their operating requirements to provide 1,000 gallons of usable volume between 85 and 110 PSIG. This response also requested the inclusion of both a magnetic level gauge and bladder monitoring device.
Also, in August 2022, RJ Sullivan requested the addition of two (2) E+H pressure transducers

DESCRIPTION OF CHANGES

			Cost Adder – To be added to Purchase Order
ITEM 1	**Reference Drawing:**	735-50015-1	$8,745
	Original:	Per Scope of Supply, PULSCO included a Bladder Monitoring Device or a Magnetic Level Gauge.	
	Proposed:	Upon approval of this Change Order Request, PULSCO will provide a Bladder Monitoring Device and an Orion Magnetic Level Gauge. 2x E+H Cerabar PMC21 transducers	
	Reason:	Wade Trim recommends the inclusion of both a BMD and Magnetic Level Gauge. Also, request for 2x transducers.	

			Cost Adder – To be added to Purchase Order
ITEM 2	**Reference Drawing:**	735-50015-2	$45,602
	Original:	Vertical 72" OD, 2,600 Gallon Tank with 90 PSIG MAWP	
	Proposed:	Vertical 108" OD, 6,100 Gallon Tank with 150 PSIG MAWP	
	Reason:	New operating parameters to provide 1,000 gallons of usable volume between 85 and 110 PSIG.	

NOTES

Reference drawing will be updated and submitted for approval after Change Order is received.

Item 1 includes revised Seismic/ Wind Calculations for the updated tank design.

Quote Validity: 15 Days. Terms and Conditions – Per Contract

Included in PCO #39

SCHEDULE / LEAD TIME

Revised Submittal will be available within 4 weeks of approved change order.

Tank fabrication time is estimated at 22 weeks from receipt of approved Submittal, with no comments.

It is advised to provide approval to release long lead steel items (tank heads and shell) as soon as possible in order to reduce risk of delays.

These lead times are estimated. Lead times may vary depending on material availability at time of order.

This $12,630.00 cost for Kubota would be part of the owner direct purchase order and should be paid directly to Kubota.

For Earth, For Life
Kubota

To: Mr. Mickey Bartlett
R. J. Sullivan Corp.
2001 N.W. 22nd St.
Pompano Beach, FL 33069
T. (954) 975-0388

PROJECT NAME	Palm Bay South Regional WRF
Customer PO#	390-01
KMU PROJECT NO.	KMU4000113
DATE	January 10, 2022

Prepared by: Mahdi Heidarizad
KUBOTA Membrane USA Corporation

Title: ***Request for Information 05***

Dear Mr. Bartlett,

Per your request to change the Plant Reuse Pump condition to 380 GPM @ 91.2 psi and 100 GPM @ 110 psi, Kubota proposed *Sulzer USA.4648-XPD.23.0032-F0* to meet these requirements. The price increase for this change is **$7,920.00.** Pumps datasheets are attached below.

In order to replace the submersible level sensor in Chlorine Contact Tank and Ground Storage Tank with ultrasonic level sensors (HydroRanger 200 Ultrasonic level controller), there is a **$4,710.00** price increase. According to Engineer approval (Comment #10 on P&ID Revision 1 or SDR 11500-04.1 Response #2), level sensors in the Sludge Storage Basins will be submersible.

Best regards,

Mahdi Heidarizad
Project Engineer
KUBOTA Membrane USA Corporation

KUBOTA Membrane USA Corporation
11807 North Creek Parkway S., Suite B-109, Bothell, WA 98011 | Phone: 425-898-2858 | Fax: 425-898-2853

Pump Performance Datasheet

Customer	: Kubota	Sulzer Reference ID	: USA.4648-XPD.23.0032-F0
Customer reference	:	Type / Size	: CPE 21-1.5 (3x1.5x8) O
Item number	: 001	Stages	: 1
Service	:	Based on curve number	: CPE21-1.5_O_1800_5H Rev 1
Quantity	: 2	Date of Last Update	: 06 Jan 2023 5:12 PM

Operating Conditions

Flow, rated	: 380.0 USgpm
Differential head / pressure, rated (requested)	: 91.20 psi
Suction pressure, rated / max	: 0.00 / 0.00 psi.g
NPSH available, rated	: Ample
Site Supply Frequency	: 60 Hz

Performance

Speed criteria	: Synchronous
Speed, rated	: 3510 rpm
Impeller diameter, rated	: 7.68 in
Impeller diameter, maximum	: 8.27 in
Impeller diameter, minimum	: 6.40 in
Efficiency	: 74.58 %
NPSH (3% head drop) / margin required	: 12.57 / 0.00 ft
nq (imp. eye flow) / S (imp. eye flow)	: 23 / 176 Metric units
MCSF	: 101.7 USgpm
Head, maximum, rated diameter	: 111.1 psi
Head rise to shutoff	: 21.47 %
Flow, best eff. point	: 400.9 USgpm
Flow ratio, rated / BEP	: 94.78 %
Diameter ratio (rated / max)	: 92.86 %
Head ratio (rated dia / max dia)	: 80.01 %
Cq/Ch/Ce/Cn [ANSI/HI 9.6.7-2010]	: 1.00 / 1.00 / 1.00 / 1.00
Selection status	: Acceptable

Liquid

Liquid type	: Water
Additional liquid description	:
Solids diameter, max	: 0.00 in
Solids concentration, by volume	: 0.00 %
Temperature, rated / max	: 68.00 / 68.00 deg F
Fluid density, rated / max	: 1.000 / 1.000 SG
Viscosity, rated	: 1.00 cSt
Vapor pressure, rated	: 0.34 psi.a

Material

Material selected	: Ductile Iron ASTM A395 60-40-18 (5H / F0047)

Pressure Data

Maximum casing/bowl working pressure	: 111.1 psi.g
Maximum allowable working pressure	: 250.0 psi.g
Maximum allowable suction pressure	: N/A
Hydrostatic test pressure	: 375.0 psi.g

Driver & Power Data (@Max density)

Driver sizing specification	: Rated power
Margin over specification	: 0.00 %
Service factor	: 1.00
Power, hydraulic	: 20.22 hp
Power, rated	: 27.11 hp
Power, maximum, rated diameter	: 30.16 hp
Minimum recommended motor rating	: 30.00 hp / 22.37 kW

Hydraulic Performance Acceptance Test: ISO 9906:2012 / HI 14.6-2011 Grade 1B

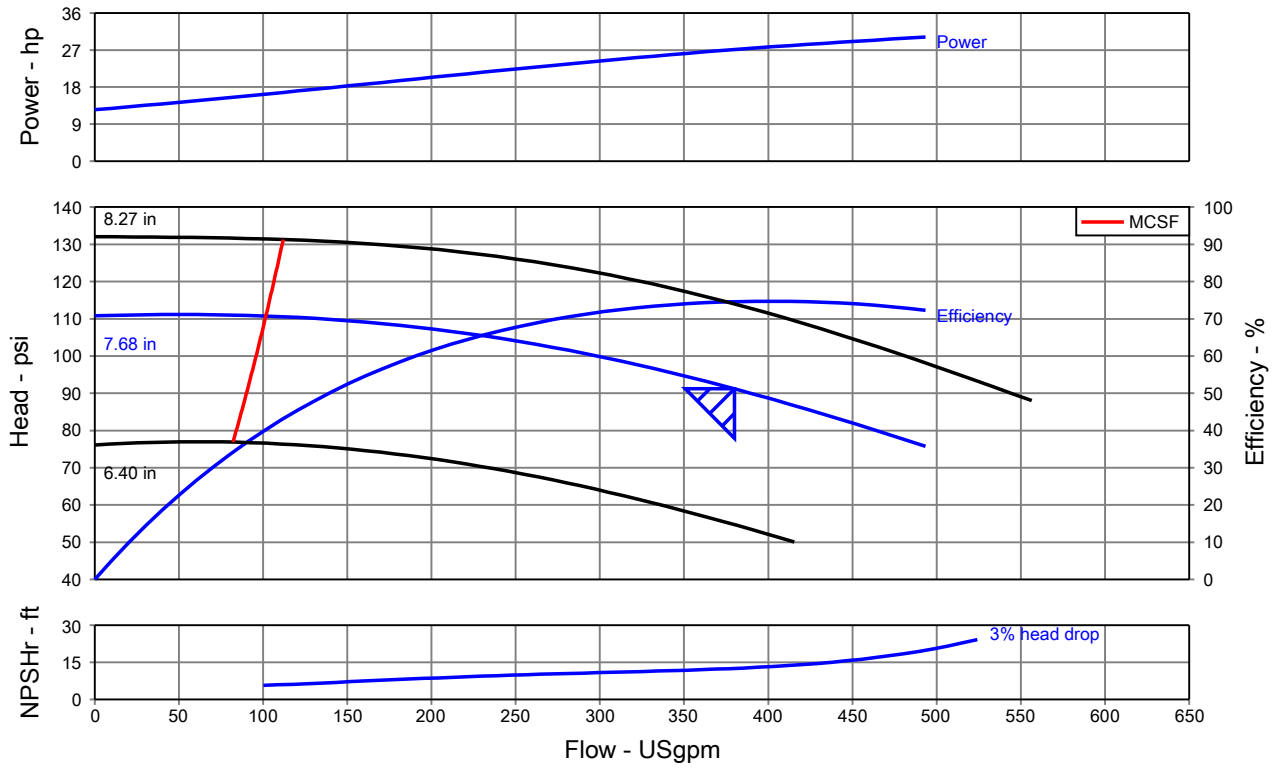

© Sulzer Ltd 2023

Centrifugal Pump Datasheet

Customer:	Kubota	Sulzer Reference ID:	USA.4648-XPD.23.0032-F0
Project name:		Inquiry Date:	
Customer reference:		Bid Submitted Date:	
Item number:	001	Date of Last Update:	2023-01-06 15:49:54
Service:		Quantity:	2

Operating Conditions

Liquid type:	Water
Temperature, Rated / Max:	68.00 deg F / 68.00 deg F
Fluid density, rated / max:	1.000 SG / 1.000 SG
Vapor pressure, rated:	0.34 psi.a
Viscosity, rated:	1.00 cSt
Consistency:	-
Air Content:	-
Discharge Flow, Rated:	380.0 USgpm
Differential Head, Rated / Actual:	91.20 psi / 92.75 psi
Suction pressure, rated / max:	0.00 psi.g / 0.00 psi.g
NPSH Available:	Ample

Performance

Performance Curve No.(s):	CPE21-1.5_O_1800_5H
Pump speed:	3510 rpm
Frequency:	60 Hz
Fixed / Variable Speed:	Fixed speed
Impeller diameter, rated:	7.68 in
Impeller diameter, maximum:	8.27 in
Impeller diameter, minimum:	6.40 in
Efficiency:	74.58 %
NPSH (3% head drop):	12.57 ft / 0.00 ft
Ns / Nss:	23 Metric: nq (imp. eye flow) / 176 Metric: nq (imp. eye flow)
Head, maximum, rated diameter:	111.1 psi
Head rise to shutoff:	21.47 %
Flow, best eff. point:	400.9 USgpm
Diameter ratio (rated / max):	92.86 %
Head ratio (rated dia / max dia):	80.01 %
Viscous Coefficients (CQ / CH / CE):	1 / 1 / 1

Pressure Data

Maximum Working Pressure:	111.1 psi.g
Working Pressure Limit:	250.0 psi.g
Suction Pressure Limit:	250.0 psi.g
Hydrostatic Test Pressure (Suction/Discharge):	375.0 psi.g
Suction pressure, rated / max:	0.00 psi.g / 0.00 psi.g
Discharge pressure, rated:	91.20 psi.g
Differential Pressure, Rated:	91.20 psi

Equipment Weights (Approximate)

Pump:	235.0 lb
Driver:	430.0 lb
Baseplate:	247.0 lb
Total Package	912.0 lb

Pump Design Data

Pump Type:	CPE
Product Line:	CPE
Pump Size / No. of Stages:	CPE 21-1.5 (3x1.5x8) O / 1
Rotation (viewed from drive end):	Clockwise
Impeller type:	Semi-Open
Casing mounting:	Foot
Casing split:	Radial
Casing Type:	Single volute

Nozzle	*Size*	*Rating*	*Face*	*Position*
Suction	NPS 3	150#	RF	End
Discharge	NPS 1.5	150#	RF	Top

Lineshaft Diameter:	-
Bearing Type, Radial:	Cylindrical roller bearing NUP 311
Lineshaft Bearing / Bowl Bearing (Vert. pumps only):	-
Bearing Type, Thrust:	2 x Angular contact ball bearing 7309
Bearing lubrication:	Oil bath equipped with oil slinger
Baseplate type:	ANSI style 1 (Formed steel)

Materials

API Material Class:	-
Barrel / Can:	-
Case / Bowls:	Ductile Iron (ASTM A395 60-40-18)
Column:	-
Discharge Head:	-
Impeller:	Duplex CD6MN (ASTM A890 3A)
Case / Impeller Wear Rings:	Duplex CD6MN (ASTM A890 3A)
Shaft:	Duplex 2205 (UNS S32205 / EN1.4462)
Diffusers:	-

Shaft Sealing, Flush & Cooling Piping Plans

Seal Size / Type:	- / Gland packing with lantern ring
Seal Code:	Gland packing with lantern ring
Seal Manufacturer:	-
Seal Flush Piping, Primary:	N/A
Seal Flush Piping, Secondary:	N/A
Cooling Water Piping:	N/A

Driver & Power Data

Driver Size:	30.00 hp
Volts/ Phase / Hz:	460V / 3 / 60 Hz
Service factor:	1
Power, rated:	27.11 hp
Power, maximum, rated diameter:	30.16 hp
Enclosure:	TEFC

Accessories

Driver:	SIEMENS Severe duty 2poles 30HP TEFC 286TS 460V FOOT-mounted
Coupling:	Falk 1030T31

Comments

-

© Sulzer Ltd 2023

Pump Performance Curve

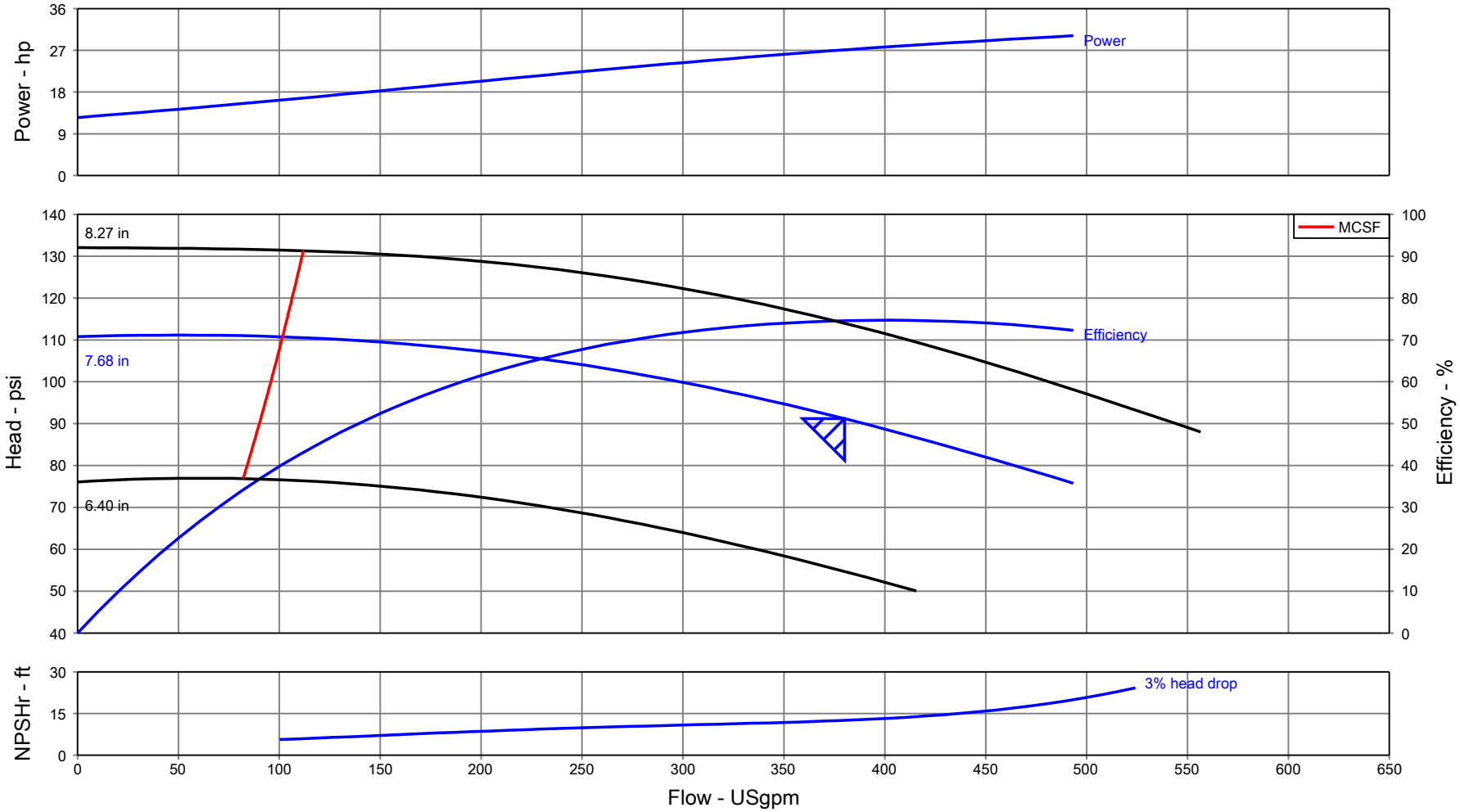

Hydraulic Performance Acceptance Test: ISO 9906:2012 / HI 14.6-2011 Grade 1B

Customer	: Kubota	Type / Size	: CPE 21-1.5 (3x1.5x8) O	Flow, rated	: 380.0 USgpm
Customer reference	:	Stages	: 1	Differential head / pressure, rated	: 91.20 psi
Item number	: 001	Speed, rated	: 3510 rpm	Liquid type	: Water
Service	:	Based on curve number	: CPE21-1.5_O_1800_5H Rev 1	Additional liquid description	:
Quantity	: 2	Efficiency	: 74.58 %	Temperature, rated / max	: 68.00 / 68.00 deg F
Sulzer Reference ID	: USA.4648-XPD.23.0032-F0	Power, rated	: 27.11 hp	Fluid density, rated / max	: 1.000 / 1.000 SG
Date of Last Update	: 06 Jan 2023 5:12 PM	NPSH (3% head drop)	: 12.57 ft	Viscosity, rated	: 1.00 cSt
				Cq/Ch/Ce/Cn [ANSI/HI 9.6.7-2010]	: 1.00 / 1.00 / 1.00 / 1.00

© Sulzer Ltd 2023

Dimensions in inches - NOTE: DO NOT USE FOR CONSTRUCTION UNLESS CERTIFIED

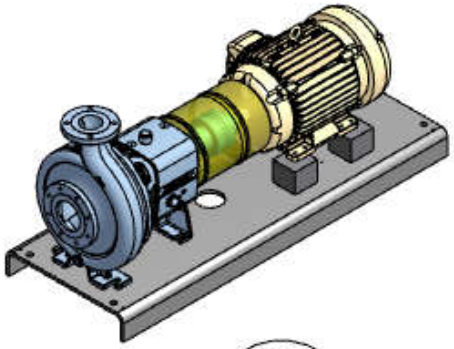

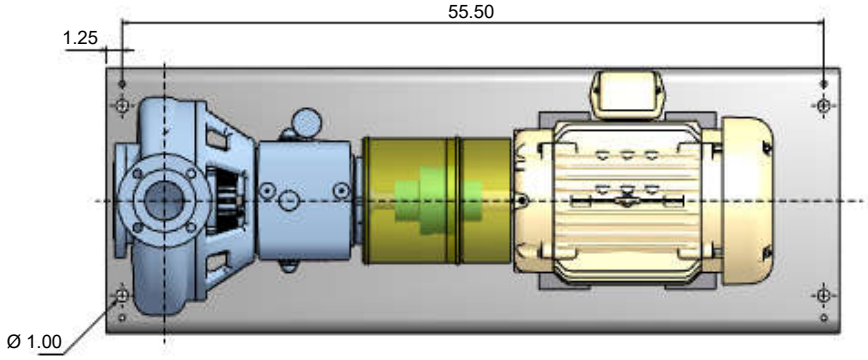

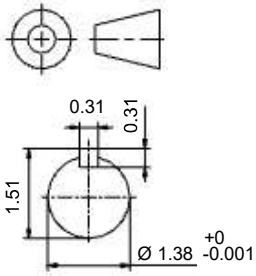

Pump shaft

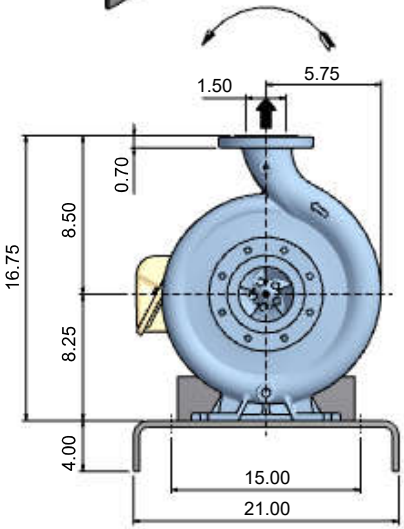

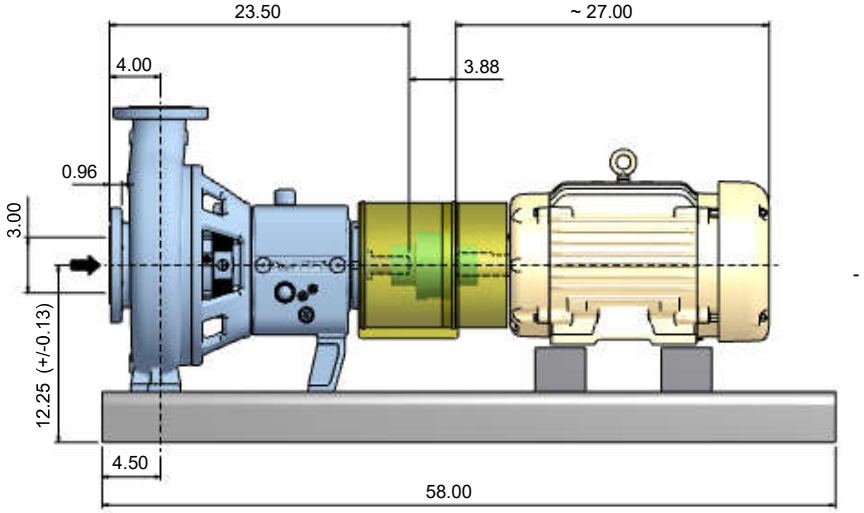

MOTOR INFORMATION

Power	30.00 hp
Frame size	286TS
Synchronous speed	3600 rpm
Voltage	460V
Frequency	60 Hz
Enclosure	TEFC

PUMP INFORMATION

Rated speed	3510 rpm
Pump Size	CPE 21-1.5 (3x1.5x8) O
No. of Stages	1

WEIGHTS

Pump	235.0 lb
Baseplate	247.0 lb
Motor	430.0 lb
TOTAL	912.0 lb

FLANGES

	Size	Drilling
Suction Flange	NPS 3	150#
Discharge Flange	NPS 1.5	150#

TENDER SUMMARY

Sulzer Reference ID	USA.4648-XPD.23.0032-F0
Project name	Kubota
Customer	Kubota
Customer reference	
Item number	001
Date Last Saved	2023-01-06 15:49:54
Service	

SULZER

General Arrangement Drawing

© Sulzer Ltd

Shop Drawing SD 13451-08.1 Response # 2

PBU2155 - South Regional Water Reclamation Facility
Palm Bay Utilities
City of Palm Bay

Subject: Wade Trim FINAL Response to SD 13451-08.1
Submitted : 01/25/2023
Created By: WadeTrim, Cruz, Rod
Type: Official

Comment:
STATUS: Approved as Noted

1. It is assumed that the contractor is accepting responsibility of providing applicable mounting thread, cable length and mounting flange for the units submitted on.

History

Jan 25 2023 11:45:17am	**Created By**	WadeTrim, Cruz, Rod
Jan 25 2023 11:45:37am	**Modified By**	WadeTrim, Cruz, Rod
Jan 25 2023 11:45:48am	**Marked Official By**	WadeTrim, Cruz, Rod
Shared With:	R.J. Sullivan, Corp.	
Jan 25 2023 11:45:48am	**Marked Official By**	WadeTrim, Cruz, Rod
Shared With:	WadeTrim	
Jan 25 2023 11:45:48am	**Marked Official By**	WadeTrim, Cruz, Rod
Shared With:	WadeTrim, Cruz, Rod	
Jan 25 2023 11:45:48am	**Marked Official By**	WadeTrim, Cruz, Rod
Shared With:	WadeTrim, Mitrovic, Aljosa	
Jan 25 2023 11:46:01am	**Forwarded By**	WadeTrim, Cruz, Rod
To:	R.J. Sullivan, Corp., Bartlett, Mickey	
Jan 25 2023 11:46:01am	**Forwarded By**	WadeTrim, Cruz, Rod
To:	City of Palm Bay, Roberts, Tim	
Jan 25 2023 11:46:01am	**Forwarded By**	WadeTrim, Cruz, Rod
To:	R.J. Sullivan, Corp., Steeves, Geraldper organization distribution settings	
Jan 25 2023 11:46:01am	**Forwarded By**	WadeTrim, Cruz, Rod
To:	R.J. Sullivan, Corp., Buckwalter, Jasonper organization distribution settings	
Jan 25 2023 11:46:01am	**Forwarded By**	WadeTrim, Cruz, Rod
To:	City of Palm Bay, Little, Christopherper organization distribution settings	
Jan 25 2023 11:46:01am	**Forwarded By**	WadeTrim, Cruz, Rod
To:	City of Palm Bay, Cardona, Danielper organization distribution settings	

eadoc

Shop Drawing SD 13451-08.1 Response # 2

PBU2155 - South Regional Water Reclamation Facility
Palm Bay Utilities
City of Palm Bay

Jan 26 2023 6:51:10am	**Read By**	R.J. Sullivan, Corp., Bartlett, Mickey

Engineers review is for general conformance with the design concept and contract documents. Markings or comments should not be construed as relieving the contractor from compliance with the project requirements, nor departures therefrom. The contractor remains responsible for details and accuracy, for confirming and correlating all quantities and dimensions, for selecting fabrication processes, for techniques of assembly, and for performing his work in a safe manner.

eadoc

rj Sullivan Corp.
GENERAL CONTRACTOR

Project

City of Palm Bay
South Regional Water Reclamation Facility

Submittal SD 13451-08.1
Ultrasonic Level Transmitter

Engineer

Wade Trim

Supplier

Kubota Membrane USA Corporation

Date Submitted:

rj Sullivan Corp.

We certify that we have reviewed this submittal for conformance with the Contract Documents and verified that all materials satisfy the requirements of the Contract. Furthermore we certify that all necessary field measurements have been made and that this submittal has been coordinated with other applicable approved submittals. This certification does not relieve the supplier or subcontractor from any provision of the Contract Documents unless specifically excepted.

Checked _____

For Earth, For Life
Kubota

Submittal Transmittal

Ultrasonic Level Transmitter – Revision 1

Project name	Palm Bay South Regional Water Reclamation Facility
Project site	Palm Bay, FL
Consulting firm	WADE TRIM 3790 Dixie Highway NE, Suite D, Palm Bay, FL 32905
Submit to	Mickey Bartlett R.J. Sullivan Corp. 2001 NW 22nd St. Pompano Beach, FL 33069
Prepared by	Mahdi Heidarizad KUBOTA Membrane USA Corporation 11807 North Creek Parkway S., Suite B-109 Bothell, WA 98011
KMU project number	4000113
Issued date	Revision 1 - 01/10/2023
Package #	KMU4000113-10R1
Spec section#	13451
Item	Ultrasonic Level Transmitter (5) Headworks, LE-010101A Feed Forward Pump Station, LE-04011A1 NaClO Tank, LE-240001A Chlorine Contact Tank Level Sensor, LE-180201A Ground Storage Tank Level Sensor, LE-250101A

Clarification:

1. Kubota will supply ultrasonic level transmitter for Feed Forward Pump Station level sensor (LE-04011A1) per Addendum #6 issued August 25, 2020.

2. Per engineer clarification, Chlorine Contact Tank level sensor, LE-180201A, and Ground Storage Tank level sensor, LE-250101A, are changed to ultrasonic level transmitter. Therefore, the total quantity of ultrasonic level transmitter changed to five (5).

SIEMENS

Datasheet for HYDRORANGER 200

HydroRanger 200 Ultrasonic level controller: continuous, non-contact, 15 m (50 ft) range. Monitors level, volume, and open channel flow in liquids, slurries, and solids.

Ordering data: **7ML50344AA01**

General

Manufacturer	Siemens
Supplier	Siemens
Product designation	Ultrasonic transducer
Brand name	HydroRanger 200
Type designation	HydroRanger 200 Ultrasonic level controller: continuous, non-contact, 15 m (50 ft) range. Monitors level, volume, and open channel flow in liquids, slurries, and solids.
Article number	7ML50344AA01
Net weight	1.4 kg
Slogan	Single or dual point level monitor/controller

Mode of operation and application

Measuring principle	ultrasonic
Operating frequency of the transmitter	44 kHz

Input

Number of sensor inputs	1

Analog input

Number of inputs	1
Signal range at the analog input	0 ... 20 mA, 4 ... 20 mA

Digital input

Number of inputs	2
Input voltage, DC	0 V...50 V
Input voltage signal 0, DC (minimum)	0.5 V
Input voltage signal 1, DC (minimum)	10 V
Input voltage signal 1, DC (maximum)	50 V
Input current (maximum)	3 mA

Measuring range

Measuring range	0.3 m...15 m
Temperature compensation	
Temperature compensation, minimum	-50 °C
Temperature compensation, maximum	150 °C

Output

Current output

Number of outputs	2
Signal range	0 ... 20 mA, 4 ... 20 mA
Failure signal (minimum)	3.8 mA
Failure signal (maximum)	22 mA
Load, at active output (maximum)	750 Ohm

Digital output

Type	relais

SIEMENS

Datasheet for HYDRORANGER 200

HydroRanger 200 Ultrasonic level controller: continuous, non-contact, 15 m (50 ft) range. Monitors level, volume, and open channel flow in liquids, slurries, and solids.

Ordering data: 7ML50344AA01

Relay output

Number	6
Type 1	Normally Open (NO)
Number of outputs 1	4
Type 2	Change-over (NO/NC)
Number of outputs 2	2

Operating conditions

Degree of pollution	Pollution degree 4
Standard for the degree of pollution	IEC 61010-1
Overvoltage class	Installation category II
Standard for the overvoltage class	IEC 61010-1

Environmental conditions

Ambient temperature during operation	-20 °C...+50 °C
Ambient temperature during storage	-20 °C...+50 °C

Electromagnetic compatibility EMC

Standard for EMC	EN 61326-1

Structural Design

Mechanical design

Design of the device	separated version, sensor separated

Material

Enclosure

Material of the transmitter	Polycarbonate (PC)

Cable entry & cable gland

Material of the cable entry	polyamide (PA)

Electrical connections

Connection technology	4-wire technology
Potential insulation	galvanic
Potential insulation	to all communications interfaces, to all inputs, to all outputs, to all supplies
Number of cable entries	4
Design of the cable entry	Cutout opening
Length of the connection cable	365 m

Display and operating controls

Display	with display
Operating controls	Membrane key
Number of controls	4

Power supply

SIEMENS

Datasheet for HYDRORANGER 200

HydroRanger 200 Ultrasonic level controller: continuous, non-contact, 15 m (50 ft) range. Monitors level, volume, and open channel flow in liquids, slurries, and solids.

Ordering data: 7ML50344AA01

Electrical

Voltage type	AC
Nominal voltage, AC	100 V, 230 V
Supply voltage, AC	85 V...265 V
Nominal frequency	50 Hz, 60 Hz
Power consumption effective power	17 W
Power consumption apparent power	36 VA

Communication

Interface for communication	RS 485
Interface for programming	RJ11 jacket
Protocol	Modbus ASCII, MODBUS RTU
Programming	SIMATIC PDM Software, with infrared hand programmer

Certificates and approvals

Verification of suitability	C-Tick (RCM), CE, CSA, FM, MCERTS Class 3 (flow measurement in open channels), UL
Environmental class according to Lloys´s Register approval system	ENV1, ENV2, ENV3, ENV5

Reliability (MTBF)

MTBF	62 a
Standard for MTBF	SN 29500
Determination procedure	calculation with component load
Reference temperature	40 °C
Applicability	Measuring device

The information provided in this data sheet contains descriptions or characteristics of performance which in case of actual use do not always apply as described or which may change as a result of further development of the products. An obligation to provide the respective characteristics shall only exist if expressly agreed in the terms of contract. Availability and technical specifications are subject to change without notice.

SIEMENS

Datasheet for ECHOMAX XPS-10 TRANSDUCER

EchoMax XPS-10 Ultrasonic level transducer: continuous, non-contact, 10 m (32.80 ft), for liquids and solids.

Ordering data: **7ML1115....0**

General

Manufacturer	Siemens
Supplier	Siemens
Product designation	Ultrasonic sensor
Brand name	Echomax XPS-10
Type designation	EchoMax XPS-10 Ultrasonic level transducer: continuous, non-contact, 10 m (32.80 ft), for liquids and solids.
Article number	7ML1115....0
Net weight	0.92 kg
Slogan	Fully encapsulated transducer, robust design, and self cleaning face

Mode of operation and application

Measuring principle	ultrasonic
Operating frequency of the sensor	44 kHz

Input

Measuring range

Measuring range	0.3 m...10 m

Operating conditions

Environmental conditions

Ambient temperature during operation	-40 °C...+95 °C

Degree of protection

IP rating	IP66, IP68

Structural Design

Mechanical design

Material

Enclosure

Material	Polyvinylidene fluoride (PVDF)

Sensor

Material of the active surface of the ultrasonic transmitter	Polyvinylidene fluoride (PVDF)

Miscellaneous

Material of the connection cable	polyvinyl chloride (PVC)

Mounting

Location	Indoor area, Outdoor area
Design of the mounting connection	External thread

Electrical connections

Length of the connection cable (maximum)	365 m
Number of conductors of the connection cable	2
Cross-sectional area of the connection cable	0.5 mm²
AWG wire size (maximum)	20

Certificates and approvals

The information provided in this data sheet contains descriptions or characteristics of performance which in case of actual use do not always apply as described or which may change as a result of further development of the products. An obligation to provide the respective characteristics shall only exist if expressly agreed in the terms of contract. Availability and technical specifications are subject to change without notice.

© Siemens 2021

HydroRanger 200 HMI

Overview

HydroRanger 200 HMI is an ultrasonic level controller for up to six pumps and provides control, differential control, and open channel flow monitoring.

Benefits

- Easy to use HMI display with local four-button programming, menu-driven parameters, and Wizard support for key applications
- English, German, French, Spanish, Chinese, Italian, Portuguese, and Russian texts on the HMI
- Removable terminal blocks for ease of wiring
- Monitors wet wells, weirs, and flumes
- Communication using built-in Modbus RTU via RS 485 and SIMATIC PDM configuration software
- Compatible with SmartLinx system: PROFIBUS DP, PROFINET (cyclic access of process values only), DeviceNet, Modbus TCP/IP, and EtherNet/IP
- Single or dual point level monitoring
- 6 relays
- Auto False-Echo Suppression for fixed obstruction avoidance
- Anti-grease ring/tide mark buildup
- Differential amplifier transceiver for common mode noise rejection and improved signal-to-noise ratio
- Wall and panel mounting options

Application

For water authorities, municipal water, and wastewater plants, HydroRanger 200 HMI is an economical, low-maintenance solution delivering control efficiency and productivity needed to meet today's exacting standards. It offers single point monitoring with all models, and optional dual-point monitoring with 6 relay model. As well, it has digital communications with built-in Modbus RTU via RS 485.

The standard 6 relay HydroRanger 200 HMI will monitor open channel flow and features advanced relay alarming and pump control functions as well as volume conversion. It is compatible with SIMATIC PDM, allowing for PC configuration and set-up. Sonic Intelligence advanced echo-processing software provides increased reading reliability.

HydroRanger 200 HMI uses proven continuous ultrasonic echo ranging technology to monitor water and wastewater of any consistency up to 15 m (50 ft) in depth. Achievable resolution is 0.1 % with accuracy to 0.25 % of range. Unlike contacting devices, HydroRanger 200 HMI is immune to problems caused by suspended solids, harsh corrosives, grease or silt in the effluent, reducing downtime.

- Key Applications: wet wells, flumes/weirs, bar screen control

Technical specifications

Mode of Operation	
Measuring principle	Ultrasonic level measurement
Measuring range	0.3 ... 15 m (1 ... 50 ft), transducer dependent
Measuring points	1 or 2
Input	
Analog	0 ... 20 mA or 4 ... 20 mA, from alternate device, scalable (6 relay model)
Discrete	10 ... 50 V DC switching level Logical 0 ≤ 0.5 V DC Logical 1 = 10 ... 50 V DC max. 3 mA
Output	
EchoMax transducer	44 kHz
Ultrasonic transducer	Compatible transducers: ST-H and EchoMax series XPS-10, XPS-15/15F, and XRS-5
Relays[1)]	Rating 5 A at 250 V AC, non-inductive
• Model with 6 relays	4 SPST Form A/2 SPDT Form
mA output	0 ... 20 mA or 4 ... 20 mA
• Max. load	750 Ω, isolated
• Resolution	0.1 % of range
Accuracy	
Error in measurement	• 0.25 % of range or 6 mm (0.24 inch), whichever is greater • ± 4 mm (0.16 inch) in combination with an XRS-5 transducer on ranges 4 m (13 ft) or less.
Resolution	0.1 % of measuring range or 2 mm (0.08 inch), whichever is greater[2)]
Temperature compensation	• -50 ... +150 °C (-58 ... +302 °F) • Integral temperature sensor in transducer • External TS-3 temperature sensor (optional) • Programmable fixed temperature values
Rated operating conditions	
Installation conditions	
• Location	Indoor / outdoor
• Installation category	II
• Pollution degree	4
Ambient conditions	
• Ambient temperature (enclosure)	-20 ... +50 °C (-4 ... +122 °F)
• Storage temperature	-20 ... +50 °C (-4 ... +122 °F)
Design	
Weight	
• Wall mount	1.22 kg (2.68 lb)
• Panel mount	1.35 kg (2.97 lb)
Material (enclosure)	Polycarbonate
Degree of protection (enclosure)	
• Wall mount	IP65/Type 4X/NEMA 4X
• Panel mount	IP54/Type 3/NEMA 3
Cable	
• Transducer and mA output signal	2-core copper conductor, twisted, shielded, 300 Vrms, 0.82 mm² (18 AWG), Belden 8 760 or equivalent is acceptable
• Max. separation between transducer and transceiver	365 m (1 200 ft)
Displays and controls	60 x 40 mm (2.36 x 1.57 inch) LCD 240 x 160 pixels resolution
Power supply[3)]	
AC version	100 ... 230 V AC ± 15 %, 50/60 Hz, 36 VA (17 W)
DC version	12 ... 30 V DC (20 W)

© Siemens 2021

Technical specifications (continued)

Certificates and approvals	• CE, RCM, EAC, KCC[4)] • FM, $CSA_{US/C}$, UL listed • $CSA_{US/C}$ Class I, Div. 2, Groups A, B, C and D, Class II, Div. 2, Groups F and G, Class III (wall mount only) • MCERTS Class 2 approved for Open Channel Flow
Communication	• RS 232 with Modbus RTU or ASCII via RJ-11 connector • RS 485 with Modbus RTU or ASCII via terminal blocks • Optional: SmartLinx cards for - PROFIBUS DPV1, PROFINET (cyclic access of process values only) - DeviceNet, Modbus TCP/IP, EtherNet/IP

1) All relays certified for use with equipment that fails in a state at or under the rated maximums of the relays.

2) Program range is defined as the empty distance to the face of the transducer plus any range extension.

3) Maximum power consumption is listed

4) EMC performance available upon request

Selection and ordering data

	Article No.
HydroRanger 200 HMI Ultrasonic level controller	**7ML5034-**
Continuous, non-contact, 15 m (50 ft) range. Monitors level, volume, and open channel flow in liquids, slurries, and solids.	■ ■ ■ ■ ■
↗ Click on the Article No. for the online configuration in the PIA Life Cycle Portal.	
Mounting, enclosure design	
4 button HMI, Wall mount, standard enclosure	**4**
4 button HMI, Wall mount, 4 entries, 4 M20 cable glands included	**5**
4 button HMI, Panel Mount	**6**
Input voltage	
100 ... 230 V AC	**A**
12 ... 30 V DC	**B**
Number of measurement points	
Single point model, 6 relays	**A**
Dual point model, 6 relays	**B**
Communication (SmartLinx)	
Without module	**0**
SmartLinx PROFIBUS DP-V0 module	**2**
SmartLinx DeviceNet module	**3**
SmartLinx PROFIBUS DP-V1 module	**4**
SmartLinx PROFINET module[2)]	**5**
SmartLinx EtherNet/IP module	**6**
SmartLinx Modbus TCP/IP module See SmartLinx product page 4/348 for more information	**7**
Approvals	
General Purpose CE, FM, $CSA_{US/C}$, UL listed, RCM, EAC, KCC	**1**
CSA Class I, Div. 2, Groups A, B, C, and D; Class II, Div. 2, Groups F and G; Class III[1)]	**2**

1) Available with Mounting/Enclosure design options 4 or 5.

2) SmartLinx PROFINET module is certified per standard V2.2.4.

Selection and ordering data

	Order code
Further designs	
Please add "**-Z**" to Article No. and specify Order code(s).	
Stainless steel tag [69 x 50 mm (2.71 x 1.97 inch)]: Measuring-point number/identification (max. 27 characters), specify in plain text	**Y15**
Test Certificate: Manufacturer's test certificate M to DIN 55350, Part 18 and to ISO 9000	**C11**
Operating Instructions	
All literature is available to download for free, in a range of languages, at	

http://www.siemens.com/processinstrumentation/documentation.

Accessories	Article No.
Tag, stainless steel, 12 x 45 mm (0.47 x 1.77 inch), one text line, suitable for enclosure	**7ML1930-1AC**
Sunshield kit, 304 stainless steel	**7ML1930-1GA**
SITRANS RD100, loop powered display - see Chapter 7	**7ML5741-...**
SITRANS RD150, remote digital display for 4 ... 20 mA and HART devices - see Chapter 7	**7ML5742-.....-....**
SITRANS RD200, universal input display with Modbus conversion - see Chapter 7	**7ML5740-...**
SITRANS RD300, dual line display with totalizer and linearization curve and Modbus conversion - see Chapter 7	**7ML5744-...**
Spare parts	
Power Supply Board (100 ... 230 V AC)	**7ML1830-1MD**
Power Supply Board (12 ... 30 V DC)	**7ML1830-1ME**
Removable terminal blocks	**A5E38824197**
Spare lid with HMI, MultiRanger 200 HMI/HydroRanger 200 HMI, wall	**A5E35778738**
Spare lid with HMI, MultiRanger 200 HMI/HydroRanger 200 HMI, panel	**A5E35778740**
SmartLinx DeviceNet module	**7ML1830-1HT**
SmartLinx PROFIBUS DP-V1 module	**A5E35778741**
Smartlinx PROFINET IO module	**7ML1830-1PM**
SmartLinx Modbus TCP/IP, EtherNet/IP module	**7ML1830-1PN**

© Siemens 2021

Dimensional drawings

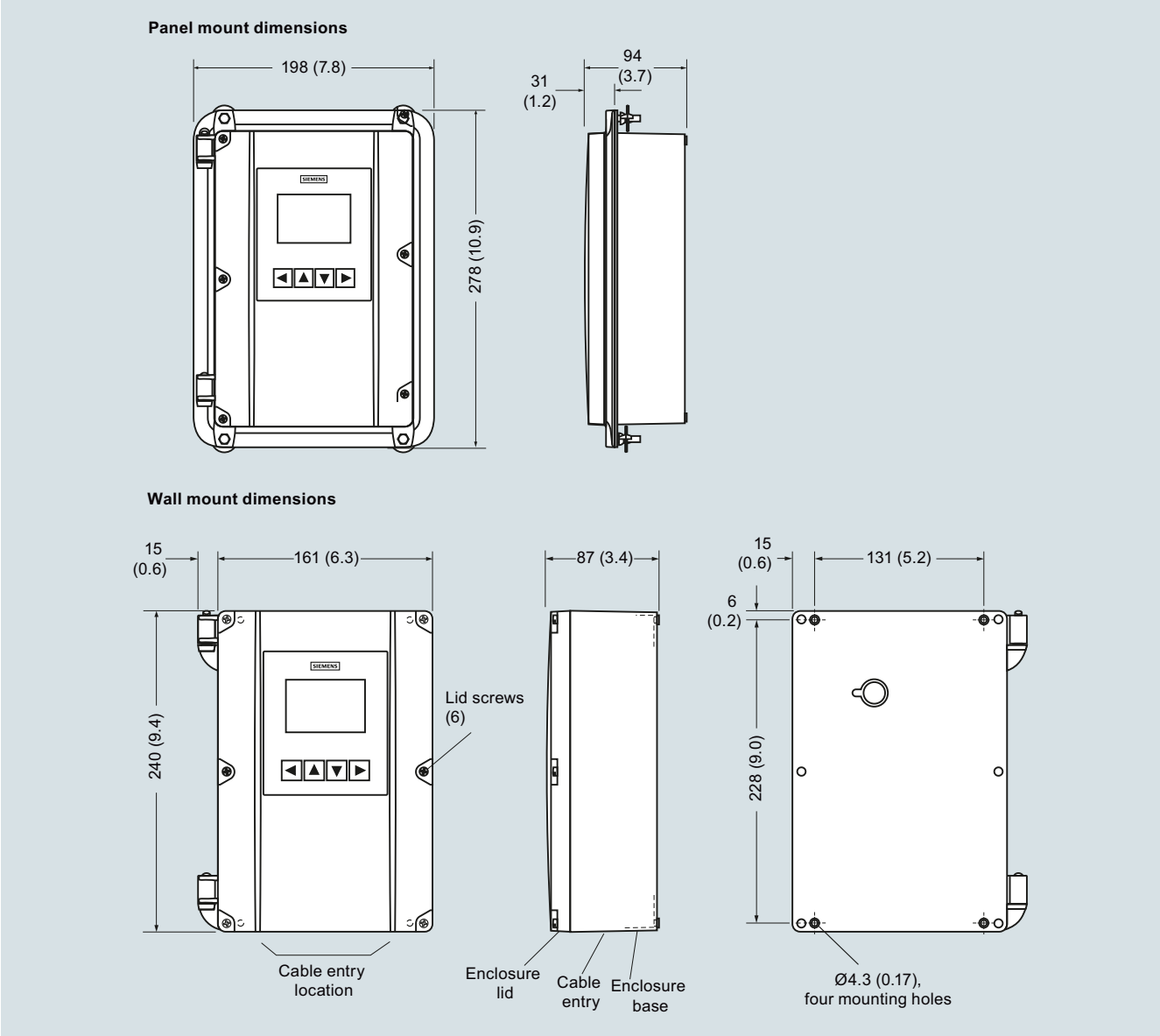

HydroRanger 200 HMI, dimensions in mm (inch)

© Siemens 2021

Circuit diagrams

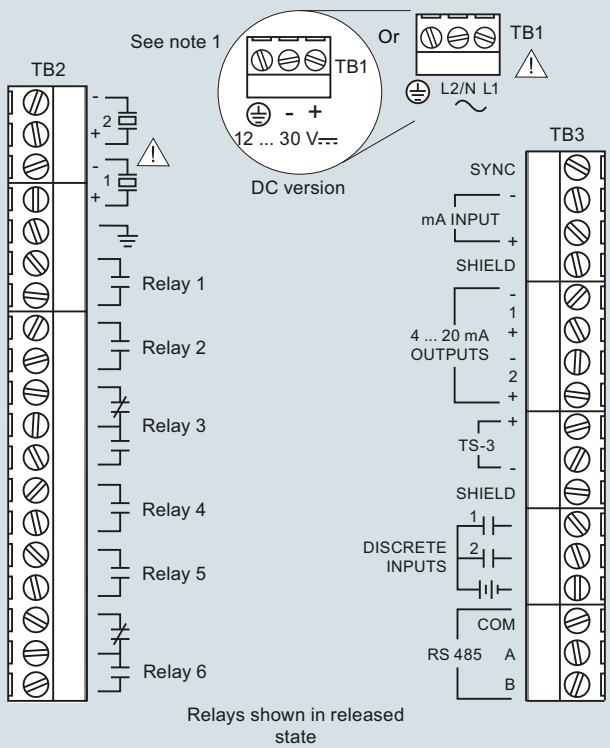

Note:

1. Use 2-core copper wire, twisted, with shield, for expansion up to 365 m (1 200 ft). Route cable in grounded metal conduit, separate from other cables.
2. Verify that all system components are installed in accordance with instructions.
3. Connect all cable shields to the HydroRanger shield connections. Avoid differential ground potentials by not connecting cable shields to ground (earth) anywhere else.
4. Keep exposed conductors on shielded cables as short as possible to reduce noise on the line caused by stray transmissions and noise pickup.

HydroRanger 200 HMI connections

© Siemens 2020

EchoMax XPS

Overview

EchoMax XPS transducers use ultrasonic technology to measure level in a wide range of liquids and solids.

Benefits

- Integral temperature compensation
- Low ringing effect reduces blanking distance
- Optional foam facing for dusty applications
- Self-cleaning and low-maintenance
- Chemically resistant
- Hermetically sealed

Application

XPS transducers can be fully immersed, are resistant to steam and corrosive chemicals, and can be installed without flanges.

The XPS series offers versions for various measuring ranges up to 30 m (100 ft) and up to a max. temperature of 95 °C (203 °F).

During operation, the EchoMax transducers emit acoustic pulses in a narrow beam. The level monitor measures the propagation time between pulse emission and its reflection (echo) to calculate the distance.

© Siemens 2020

Technical specifications

Input	XPS-10	XPS-15 (standard and F models)	XPS-30
Measuring range[1)]	0.3 ... 10 m (1 ... 33 ft)	Standard: 0.3 ... 15 m (1 ... 50 ft) XPS-15F: 0.45 ... 15 m (1.5 ... 50 ft)	0.6 ... 30 m (2 ... 100 ft)
Output			
Frequency	44 kHz	44 kHz	30 kHz
Beam angle	12°	6°	6°
Environmental			
Location	Indoors/outdoors		
Ambient temperature	-40 ... +95 °C (-40 ... +203 °F)	Standard: -40 ... +95 °C (-40 ... +203 °F) XPS-15F: -20 ... +95 °C (-4 ... +203 °F)	-40 ... +95 °C (-40 ... +203 °F)
Storage temperature	-40 ... +95 °C (-40 ... +203 °F)	Standard: -40 ... +95 °C (-40 ... +203 °F) XPS-15F: -20 ... +95 °C (-4 ... +203 °F)	-40 ... +95 °C (-40 ... +203 °F)
Pollution degree	4		
Pressure	8 bar g (120 psi g) Flanged: 0.5 bar g (7.25 psi g)	8 bar g (120 psi g) Flanged: 0.5 bar g (7.25 psi g)	0.5 bar g (7.25 psi g) Flanged: 0.5 bar g (7.25 psi g)
Design			
Weight	0.8 kg (1.8 lb)	1.3 kg (2.8 lb) Flanged: 2 kg (4.4 lb)	4.3 kg (9.5 lb)
Power supply	Operation of transducer only with approved Siemens controllers		
Material	Standard: PVDF Flanged: PVDF with CPVC flange Option: PTFE face with CPVC flange	Standard: PVDF Flanged: PVDF with CPVC flange Option: PTFE face with CPVC flange	Standard: PVDF Flanged: PVDF with CPVC flange Option: PTFE face with CPVC flange
Color	Blue	Standard: Blue XPS-15F: Gray	Blue
Process connection	1" NPT or 1" BSPT	Standard: 1" NPT or 1" BSPT XPS-15F: 1" NPT	1.5" universal thread (NPT or BSPT)
Degree of protection	IP66/68	IP66/68	IP66/68
Cable	2-wire twisted pair/braided and foil shielded 0.5 mm^2 (20 AWG) PVC jacket		
Separation	Max. 365 m (1 200 ft)		
Certificates and approvals	Standard: CE, CSA, FM, ATEX, IECEx	Standard: CE, CSA, FM, ATEX, IECEx XPS-15F: FM Class I, Div. 1, Groups A, B, C, and D, Class II Div. 1, Groups E, F, and G, Class III	CE, CSA, FM, ATEX, IECEx

[1)] Max range is rated for measurement of liquids, recommended range for solids is 50 % of maximum. Application conditions such as extreme dust or angle of repose may reduce the usable maximum range. Consult a local sales person for more details.

© Siemens 2020

Selection and ordering data

	Article No.
EchoMax XPS-10 Ultrasonic level transducer ↗	**7ML1115-**
Continuous, non-contact, 10 m (32.80 ft), for liquids and solids.	■ ■ ■ ■ **0**
↗ Click on the Article No. for the online configuration in the PIA Life Cycle Portal.	
Mounting thread and facing	
1" NPT [(Taper), ANSI/ASME B1.20.1]	**0**
1" NPT [(Taper), ANSI/ASME B1.20.1] with foam facing[1)]	**1**
1" NPT [(Taper), ANSI/ASME B1.20.1] with PTFE facing[2)]	**2**
R 1" [(BSPT), EN 10226]	**3**
R 1" [(BSPT), EN 10226] with foam facing[1)]	**4**
R 1" [(BSPT), EN 10226] with PTFE facing[2)]	**5**
Cable length	
5 m (16.40 ft)	**B**
10 m (32.81 ft)	**C**
30 m (98.43 ft)	**E**
50 m (164.04 ft)	**F**
100 m (328.08 ft)	**K**
Mounting flange	
None	**A**
3" ASME, 150 lb, flat faced	**C**
4" ASME, 150 lb, flat faced	**D**
6" ASME, 150 lb, flat faced	**E**
8" ASME, 150 lb, flat faced	**F**
DN 80, PN 10/16, Type A, flat faced	**G**
DN 100, PN 10/16, Type A, flat faced	**J**
DN 150, PN 10/16, Type A, flat faced	**L**
JIS10K3B Style	**M**
JIS10K4B Style	**P**
JIS10K6B Style (Note: Flange bolting patterns and facings dimensionally correspond to the applicable ASME B16.5 or EN 1092-1, or JIS B 2220 standard.)	**R**
Approvals	
ATEX 2GD Ex mb IIC T4 Gb, Ex tb IIIC T135 °C Db; IECEx SIR 13.0009X Ex mb IIC T4 Gb, Ex tb IIIC T135 °C Db; FM Class I, Div. 2, Groups A, B, C, D; Class II, Div. 1, Groups E, F, G; Class III	**3**
CSA Class I, Div. 1, Groups A, B, C, D, Class II, Div. 1, Groups E, F, G, Class III [3)]	**4**

[1)] Not available with flanged versions.
[2)] Available with flanged versions only.
[3)] Valid with mounting thread and facing options 0 ... 2 only.

	Order code
Further designs	
Please add "**-Z**" to Article No. and specify Order code(s).	
Stainless steel tag [69 x 50 mm (2.71 x 1.97 inch)]: Measuring point number/identification (max. 27 characters) specify in plain text	**Y15**
Operating Instructions	
All literature is available to download for free, in a range of languages, at	
http://www.siemens.com/processinstrumentation/documentation	
Accessories	Article No.
Tag, stainless steel with hole, 12 x 45 mm (0.47 x 1.77 inch), one text line for fastening on sensors	**7ML1930-1BJ**
Submergence shield kit	**7ML1830-1BH**
Easy Aimer 2, aluminum, NPT with ¾" x 1" PVC coupling	**7ML1830-1AQ**
Easy Aimer 2, aluminum with M20 adapter and 1" and 1½" BSPT aluminum couplings	**7ML1830-1AX**
Easy Aimer 304, NPT with 1" stainless steel coupling	**7ML1830-1AU**
Easy Aimer 304, with M20 adapter and 1" and 1½" BSPT 304 stainless steel couplings	**7ML1830-1GN**
Universal box bracket, mounting kit	**7ML1830-1BK**
Channel bracket, wall mount	**7ML1830-1BL**
Extended channel bracket, wall mount	**7ML1830-1BM**
Channel bracket, floor mount	**7ML1830-1BN**
Extended channel bracket, floor mount	**7ML1830-1BP**
Bridge channel bracket, floor mount (see Mounting Brackets on page 4/186 for more information)	**7ML1830-1BQ**
1" NPT locknut, plastic	**7ML1830-1DS**
1" BSP locknut, plastic	**7ML1830-1DR**
1" BSP locknut, flanged, plastic	**7ML1830-1DN**
Plastic adapter 1" BSP - 20 mm	**7ML1830-1EA**
Plastic adapter 1" NPT	**7ML1930-1FX**
Plastic adapter 1" NPT/M20	**7ML1830-1EF**

© Siemens 2020

Dimensional drawings

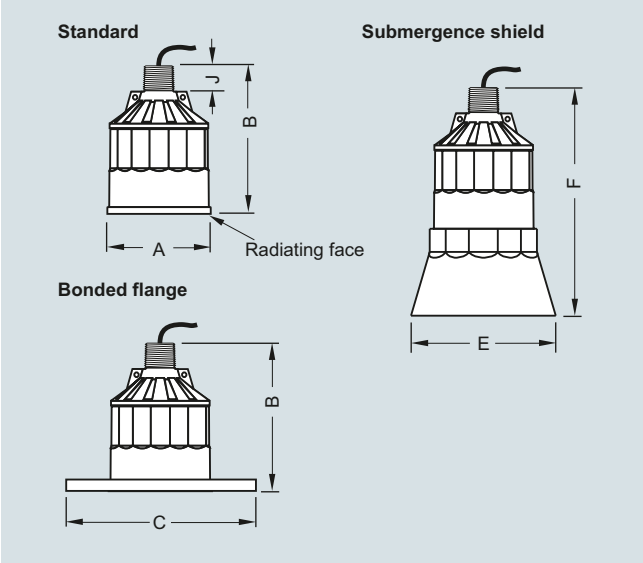

XPS ultrasonic transducer

Version			
Dimension	**XPS-10**	**XPS-15**	**XPS-30**
A	88 mm (3.464 inch)	121 mm (4.764 inch)	175 mm (6.890 inch)
B	122 mm (4.803 inch)	132 mm (5.197 inch)	198 mm (7.795 inch)
C	According to ASME, DIN, and JIS		
E	124 mm (4.882 inch)	158 mm (6.220 inch)	n/a
F	152 mm (5.984 inch)	198 mm (7.795 inch)	n/a
J	28 mm (1.1 inch)	28 mm (1.1 inch)	28 mm (1.1 inch)

Circuit diagrams

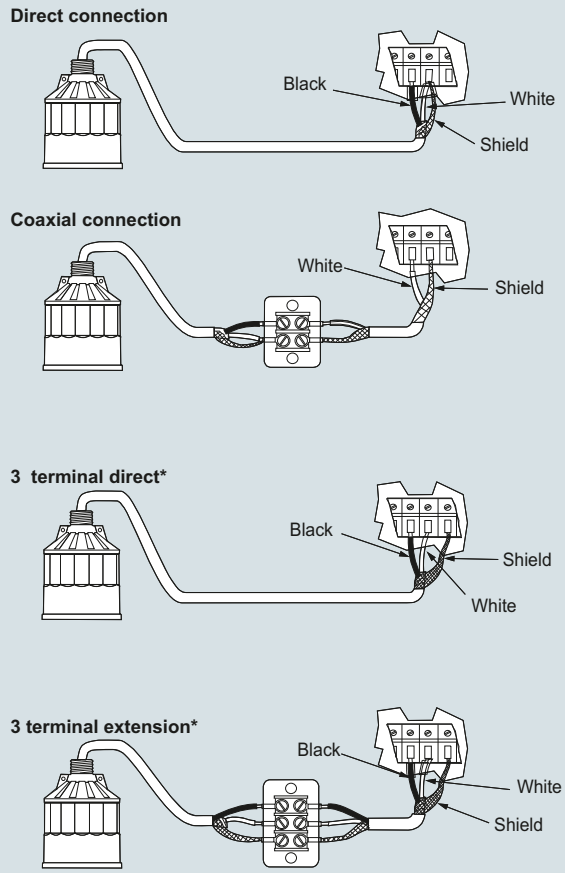

* For SITRANS LUT400, MultiRanger 100/200, HydroRanger 200

Mounting
Make particularly sure that the radiating face of the transducer is protected from damage. Mount the transducer so that it is above the maximum material level by at least the blanking value. On liquid applications, the transducer must be mounted so that the axis of transmission is perpendicular to the liquid surface. On solids applications, an Easy Aimer should be used to facilitate aiming the transducer. Consider the optional temperature sensor when mounting the transducer.

Interconnection
Do not route cable openly or near high voltage or current runs, contactors and SCR control drives. For optimum isolation against electrical noise, run cable separately in a grounded metal conduit. Seal all thread connections to prevent ingress of moisture.

XPS ultrasonic transducer connections

PULSCO

Change Order Request

Quote No.:	P5119V60 Q01	**Date:**	4/20/2022
PO Number:	390-04	**Prepared by:**	Iain Case
Company:	RJ Sullivan Corporation	**Title:**	Project Engineer
Contact:	Mickey Bartlett	**Email:**	i.case@pulsco.com
Project Name:	Palm Bay South Regional WRF	**Phone:**	949-261-1717

Included in PCO #39

SUMMARY

PULSCO's original Scope of Supply included a 2,600 Gallon 72" OD vertical tank, per initial Contract Drawings and Specifications. PULSCO also included either a magnetic level gauge or a bladder monitoring device. Per Submittal R2 comments from Wade Trim, received 09MAR22 and RFI #035 Response, received 30MAR22, it was determined that the tank size and MAWP must increase. Wade Trim updated their operating requirements to provide 1,000 gallons of usable volume between 85 and 110 PSIG. This response also requested the inclusion of both a magnetic level gauge and bladder monitoring device.

DESCRIPTION OF CHANGES

ITEM 1	**Reference Drawing:**	735-50015-1	**Cost Adder – To be added to Purchase Order**
	Original:	Per Scope of Supply, PULSCO included a Bladder Monitoring Device or a Magnetic Level Gauge.	**$7,380**
	Proposed:	Upon approval of this Change Order Request, PULSCO will provide a Bladder Monitoring Device and an Orion Magnetic Level Gauge.	
	Reason:	Wade Trim recommends the inclusion of both a BMD and Magnetic Level Gauge.	

ITEM 2	**Reference Drawing:**	735-50015-2	**Cost Adder – To be added to Purchase Order**
	Original:	Vertical 72" OD, 2,600 Gallon Tank with 90 PSIG MAWP	**$45,602**
	Proposed:	Vertical 108" OD, 6,100 Gallon Tank with 150 PSIG MAWP	
	Reason:	New operating parameters to provide 1,000 gallons of usable volume between 85 and 110 PSIG.	

NOTES

Reference drawing will be updated and submitted for approval after Change Order is received.

Item 1 includes revised Seismic/ Wind Calculations for the updated tank design.

Quote Validity: 15 Days

Terms and Conditions – Per Contract

SCHEDULE / LEAD TIME

Revised Submittal will be available within 4 weeks of approved change order.

Tank fabrication time is estimated at 22 weeks from receipt of approved Submittal, with no comments.

It is advised to provide approval to release long lead steel items (tank heads and shell) as soon as possible in order to reduce risk of delays.

These lead times are estimated. Lead times may vary depending on material availability at time of order.

PCO #15 - Additional Items and Items Not Yet Ordered

Item #	Qty Req'd	Unit	Item	Already Ordered	Add
1	2	EACH	4" Companion Flange	0	2
19	1	EACH	4" FLG 45° Bend	0	1
7, 11, 13, 17, 21, 25, 26	7	EACH	4" FLG 90° Bend	4	3
28	35	EACH	4" FLG Accessory Set (02661-2.01B.2.a.ii. & iii. and 15200-2.01B.3.a.ii. & iii.)	29	6
5	2	EACH	4" FLG Check Valve (15200-2.06B.)	2	0
3	2	EACH	4" FLG Flexible Connection (15200-2.01H.)	0	2
23	2	EACH	4" FLG Gasket Only (02661-2.01B.2.a.ii. and 15200-2.01B.3.a.ii.)	2	0
6	2	EACH	4" FLG Gate Valve (15200-2.06F.)	2	0
9, 15	2	EACH	4" FLG Tee	2	0
2, 4, 14	5	EACH	4" x 00'-08" FLG x FLG	0	5
16	1	EACH	4" x 01'-00" FLG x FLG w/ 1/2" Tap	0	1
22	1	EACH	4" x 02'-08" FLG x FLG	0	1
10	1	EACH	4" x 02'-08" FLG x FLG w/ 1" Tap	0	1
8	1	EACH	4" x 03'-03" FLG x FLG	0	1
24	1	EACH	4" x 03'-08" FLG x FLG	0	1
12, 18	2	EACH	4" x 04'-08" FLG x FLG	0	2
27	1	EACH	4" x 06'-00" FLG x PE	0	1
20	1	EACH	4" x 10'-00" FLG x FLG	0	1

Revised Piping

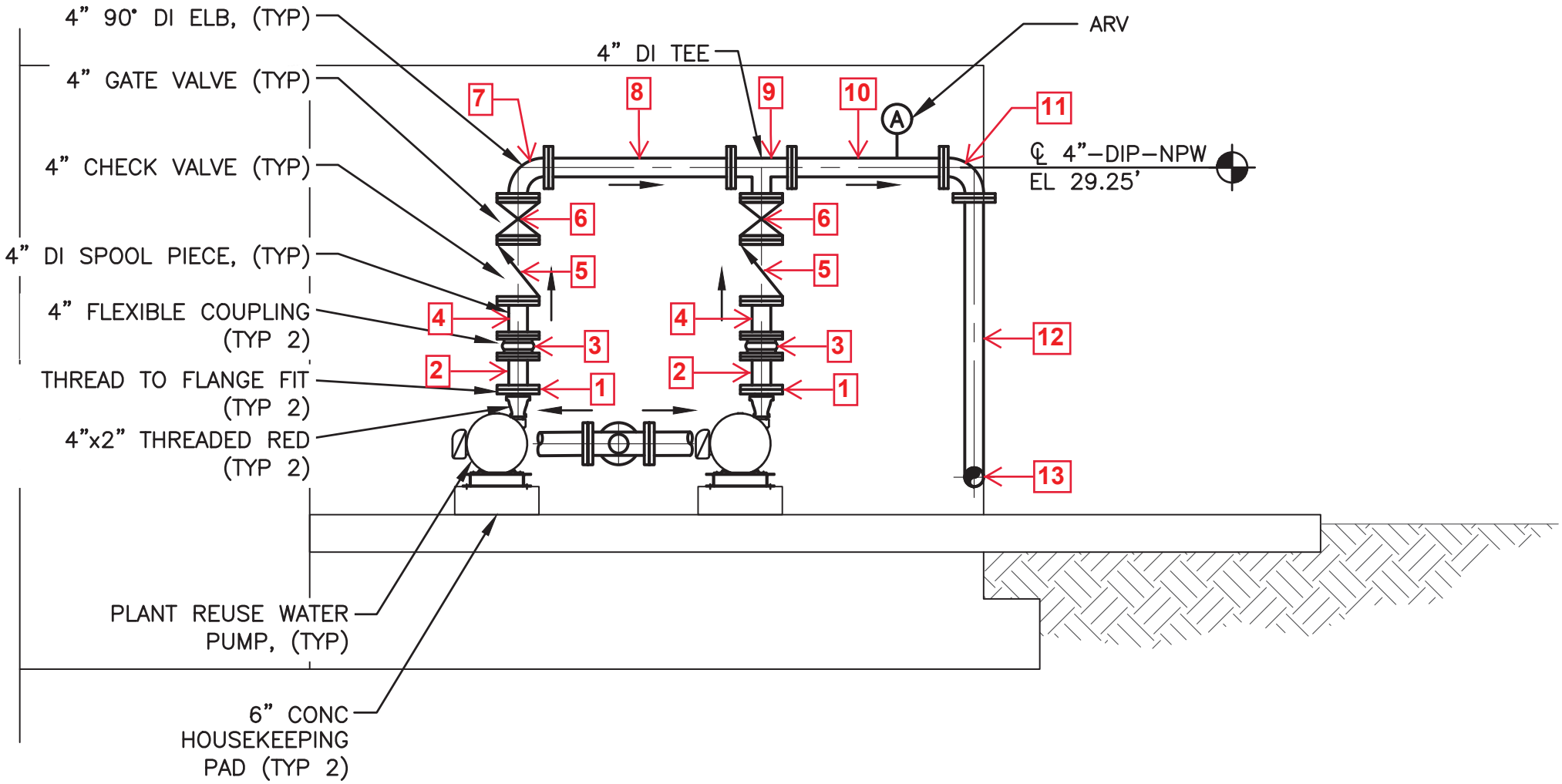

Revised Piping

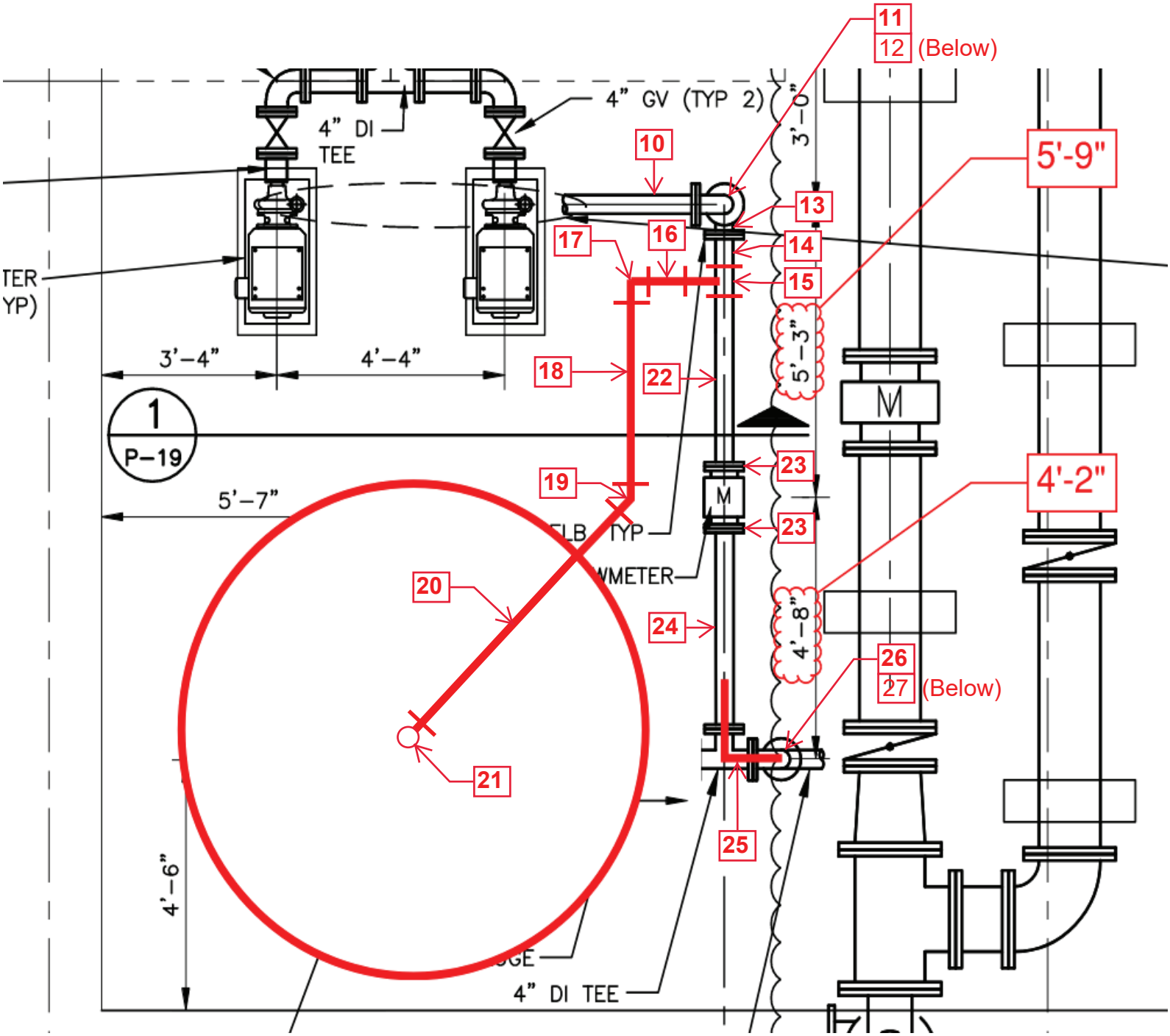

6520 Harney Road - Tampa, FL 33610
Post Office Box 16039 - Tampa, FL 33687-6039
(813) 740-1144 - FAX (813) 627-9387

Serving the Water & Wastewater Plant Industry for over 30 Years

To:	RJ SULLIVAN	Fax:	
Attn:	Mickey Bartlett	Phone:	
Subject:	PCO #15 Plant Reuse WPDP - AIS	Date:	March 14, 2023
From:	Chris Stratton	Quote #:	

Terms	F.O.B.	Freight	Ship Via	Validity
Net 30	Factory	SEE BELOW	Best Way	30 Days

LINE #	Quantity	Size	Description	Unit Price	Total	Lead Time
01	2	04"	DI COMPANION FLANGE FOR STEEL	68.82	137.64	TBD
02	1	04"	DI FLG 45 BEND (C/L, PC) DOMESTIC	434.36	434.36	TBD
03	3	04"	DI FLG 90 ELL (C/L, PC) DOMESTIC	271.70	815.10	TBD
04	8	04"	FLG ACCY SET (316SS A193 GRADE B8M BOLTS, GRADE B8 NUTS W/ 1/8" FULL FACE RED RUBBER GASKET) (DOMESTIC/AIS)	389.85	3,118.80	1 WEEK
05	2	04"	FLG SINGLE OPEN ARCH EXPANSION JOINT (DOMESTIC/AIS) #1101-0040-060-ONN (1101 O/A 4 X 6 F/F NEO) #RRS-0040-CSG (R/R SET 4IN CSG) #CU-2RS-0040-GB (CONTOL UNIT 2-ROD 4IN.)	568.64	1,137.28	6-7 WEEKS
06	5	04" X 00'-08"	FLG X FLG CLASS 53 DIP (C/L, PC)	525.53	2,627.65	TBD
07	1	04" X 01'-00"	FLG X FLG CLASS 53 DIP W/ 1/2" TAP (C/L, PC)	703.46	703.46	TBD
08	1	04" X 02'-08"	FLG X FLG CLASS 53 DIP (C/L, PC)	662.03	662.03	TBD
09	1	04" X 02'-08"	FLG X FLG CLASS 53 DIP W/ 01"TOL (C/L, PC)	1,252.39	1,252.39	TBD
10	1	04" X 03'-03"	FLG X FLG CLASS 53 DIP (C/L, PC)	696.15	696.15	TBD
11	1	04" X 03'-08"	FLG X FLG CLASS 53 DIP (C/L, PC)	730.28	730.28	TBD
12	2	04" X 04'-08"	FLG X FLG CLASS 53 DIP (C/L, PC)	798.53	1,597.06	TBD
13	1	04" X 06'-00"	FLG X PE CLASS 53 DIP (C/L, PC)	635.21	635.21	TBD
14	1	04" X 10'-00"	FLG X FLG CLASS 53 DIP (C/L, PC)	1,139.78	1,139.78	TBD
15	1	04"	FLG RW NRS GATE VALVE, C515, DI BODY, 304SS STEM, & EPDM DISC	739.50	739.50	STOCK
16						
17						
18						
19						
20						
21						
22						
23						
24						
25						
26						
27						
28						
29						
30						
31						
32						
				Sub-Total:	16,426.69	
				Freight:	750.00	
				TOTAL:	17,176.69	

Sales Tax NOT Included

All Material Subject to Prior Sale
McDade Waterworks, Inc. reserves the right to apply "Price in Effect" at time of delivery due to shortages and/or further tariff declarations by state or federal agencies. McDade Waterworks Inc. will not be responsible for industry price changes or shortages beyond our control as a result of changes to the current tariff law.

This quotation is for your acceptance in its entirety within 30 Days.
If quantities or descriptions should change, McDade Waterworks, Inc, reserves the right to submit a revised quotation.

Sincerely,
McDade Waterworks, Inc.

Christopher Stratton Jr.

Chinchor Electric, Inc.
1460 S. Leavitt Ave.
Orange City, FL 32763
P: 386-774-1020

Project Name: Palm Bay SRWRF | Change Order Description: RFP-015 Additional | Date 8/26/2022

				UNIT PRICES						TOTAL COSTS				
	Pay Item & Description	Basic Qty		MATL W/O Tax	Total Material W/O Tax	Crew Rate w/o Burden	Crew Rate w/Burden	H.D.P.T.	Equip. Rate	MATL W/Tax	LABOR	SUBS	Equip	TOTAL COSTS
Item #	**Labor Cost**													
2	Project Manger	1	HR	$ 125.00	$ 125.00	$ -				$ 133.75	$ -	$ -	$ -	$ 133.75
3	Journeyman	40	HR	$ 95.00	$ 3,800.00	$ -				$ 4,066.00	$ -	$ -	$ -	$ 4,066.00
4	Apprentice	80	HR	$ 85.00	$ 6,800.00	$ -				$ 7,258.00	$ -	$ -	$ -	$ 7,258.00
5			HR		$ -	$ -				$ -	$ -	$ -	$ -	$ -
6			HR		$ -	$ -	$ -			$ -	$ -	$ -	$ -	$ -
7			HR		$ -	$ -	$ -			$ -	$ -	$ -	$ -	$ -
8			HR		$ -	$ -	$ -			$ -	$ -	$ -	$ -	$ -
9			HR		$ -	$ -	$ -			$ -	$ -	$ -	$ -	$ -
10			HR		$ -	$ -	$ -			$ -	$ -	$ -	$ -	$ -
11			HR		$ -	$ -	$ -			$ -	$ -	$ -	$ -	$ -
12			HR		$ -	$ -	$ -			$ -	$ -	$ -	$ -	$ -
13			HR		$ -	$ -	$ -			$ -	$ -	$ -	$ -	$ -
14			HR		$ -	$ -	$ -			$ -	$ -	$ -	$ -	$ -
	Pay Item & Description	Basic Qty		MATL W/O Tax	Total Material W/O Tax	Crew Rate w/o Burden	Crew Rate w/Burden	H.D.P.T.	Equip. Rate	MATL W/Tax	LABOR	SUBS	Equip	TOTAL COSTS
Item #	**Material Breakdown**													
	3/4'' Painted Aluminum Risers	18	EA	$ 30.08	$ 541.44		$ -			$ 579.34	$ -	$ -	$ -	$ 579.34
	3'4'' PVC SCH 40 Conduit	1080	FT	$ 1.93	$ 2,084.40		$ -			$ 2,230.31	$ -	$ -	$ -	$ 2,230.31
	3/4'' Alumium Conduit	220	FT	$ 2.82	$ 620.40		$ -			$ 663.83	$ -	$ -	$ -	$ 663.83
	3/4'' EYSR	2	EA	$ 536.13	$ 1,072.26		$ -			$ 1,147.32	$ -	$ -	$ -	$ 1,147.32
	3/4'' STAG Hubs	2	EA	$ 29.82	$ 59.64		$ -			$ 63.81	$ -	$ -	$ -	$ 63.81
	3/4'' Aluminum Grounding Bushing	12	EA	$ 42.10	$ 505.20					$ 540.56		$ -	$ -	$ 540.56
	PVC Glue Quart	1	EA	$ 19.59	$ 19.59					$ 20.96		$ -	$ -	$ 20.96
	#14AWG Copper XHHW Red & Green	2250	FT	$ 0.27	$ 607.50		$ -			$ 650.03	$ -	$ -	$ -	$ 650.03
	#10AWG Copper XHHW Red & Green	1000	FT	$ 0.40	$ 400.00		$ -			$ 428.00	$ -	$ -	$ -	$ 428.00
	3/4'' TYPE LA Sealtight FLEX Conduit	10	FT	$ 1.25	$ 12.50		$ -			$ 13.38	$ -	$ -	$ -	$ 13.38
	3/4 Sealtight Connectors	4	EA	$ 31.39	$ 125.56		$ -			$ 134.35	$ -	$ -	$ -	$ 134.35
	Duct Bank Spacers	60	EA	$ 2.10	$ 126.00		$ -			$ 134.82	$ -	$ -	$ -	$ 134.82
	2500 PSI Concrete	5	YR	$ 188.00	$ 940.00		$ -			$ 1,005.80	$ -	$ -	$ -	$ 1,005.80
	Fuel / Envirn Fee PER TRUCK	1	LS	$ 45.00	$ 45.00		$ -			$ 48.15	$ -	$ -	$ -	$ 48.15
	Duck Bank Rebar #4	1000	FT	$ 1.00	$ 1,000.00		$ -			$ 1,070.00	$ -	$ -	$ -	$ 1,070.00
	Misc. Conduit Pieces	1	LS	$ 500.00	$ 500.00		$ -			$ 535.00	$ -	$ -	$ -	$ 535.00
	Stainless Steel 304 Strut	20	FT	$ 61.64	$ 1,232.80		$ -			$ 1,319.10	$ -	$ -	$ -	$ 1,319.10
	Misc. Stainless Steel Hardware	1	LS	$ 200.00	$ 200.00		$ -			$ 214.00	$ -	$ -	$ -	$ 214.00
	Pay Item & Description	Basic Qty		MATL W/O Tax	Total Material W/O Tax	Crew Rate w/o Burden	Crew Rate w/Burden	H.D.P.T.	Equip. Rate	MATL W/Tax	LABOR	SUBS	Equip	TOTAL COSTS
Item #	**Equipment Cost**													
	Work Truck	5		$ 136.36	$ 681.80		$ -			$ 729.53	$ -	$ -	$ -	$ 729.53
	Concrete Vibrator	1		$ 51.00	$ 51.00		$ -			$ 54.57	$ -	$ -	$ -	$ 54.57
					$ -		$ -		$ -	$ -	$ -	$ -	$ -	$ -
					$ -		$ -		$ -	$ -	$ -	$ -	$ -	$ -
					$ -		$ -		$ -	$ -	$ -	$ -	$ -	$ -
					$ -		$ -		$ -	$ -	$ -	$ -	$ -	$ -
					$ -		$ -		$ -	$ -	$ -	$ -	$ -	$ -
	Pay Item & Description	Basic Qty		MATL W/O Tax	Total Material W/O Tax	Crew Rate w/o Burden	Crew Rate w/Burden	H.D.P.T.	Equip. Rate	MATL W/Tax	LABOR	SUBS	Equip	TOTAL COSTS
Item #	**Hotel/Per-Diem/Travel**													
1	Hotel Room Two Queen Bed Room Per Night	5			$ -		$ -	$ 120.00		$ -	$ -	$ 600.00	$ -	$ 600.00
2	Per-diem, Per Employee, Per Night	10			$ -		$ -	$ 60.00		$ -	$ -	$ 600.00	$ -	$ 600.00
					$ -		$ -	$ -		$ -	$ -	$ -	$ -	$ -
					$ -		$ -	$ -		$ -	$ -	$ -	$ -	$ -
					$ -		$ -	$ -		$ -	$ -	$ -	$ -	$ -
					$ -		$ -	$ -		$ -	$ -	$ -	$ -	$ -
					$ -		$ -	$ -		$ -	$ -	$ -	$ -	$ -
					$ -		$ -	$ -		$ -	$ -	$ -	$ -	$ -
					$ -		$ -	$ -		$ -	$ -	$ -	$ -	$ -
TOTAL COSTS					**$ 21,550.09**					**$ 23,040.60**	**$ -**	**$ 1,200.00**	**$ -**	**$ 24,240.60**
MARKUP				15.0%						$ 3,456.09	$ -	$ 180.00	$ -	$ 3,636.09
SURTAX Rate				1.0%	$ 197.50									
SUBTOTAL										$ 26,496.69	$ -	$ 1,380.00	$ -	$ 27,876.69
GENERAL LIABILITY & BOND									0.800%					$ 223.01
TOTAL COST THIS CHANGE														**$ 28,099.70**

PCO #15 - Items to Credit for As-Bid Piping Not Yet Ordered

Item #	Qty Req'd	Unit	Item	Already Ordered	Credit
1	2	EACH	4" Companion Flange	0	2
7, 11, 13, 20	4	EACH	4" FLG 90° Bend	4	0
22	29	EACH	4" FLG Accessory Set (02661-2.01B.2.a.ii. & iii. and 15200-2.01B.3.a.ii. & iii.)	29	0
5	2	EACH	4" FLG Check Valve (15200-2.06B.)	2	0
3	2	EACH	4" FLG Flexible Connection (15200-2.01H.)	0	2
15	2	EACH	4" FLG Gasket Only (02661-2.01B.2.a.ii. and 15200-2.01B.3.a.ii.)	2	0
6	2	EACH	4" FLG Gate Valve (15200-2.06F.)	5	0
9, 17	2	EACH	4" FLG Tee	2	0
2, 4	4	EACH	4" x 00'-08" FLG x FLG	0	4
18	1	EACH	4" x 02'-03" FLG x FLG w/ 1/2" Tap	0	1
10	1	EACH	4" x 02'-08" FLG x FLG w/ 1" Tap	0	1
8	1	EACH	4" x 03'-03" FLG x FLG	0	1
16	1	EACH	4" x 03'-08" FLG x FLG	0	1
19	1	EACH	4" x 04'-00" FLG x FLG	0	1
14	1	EACH	4" x 04'-03" FLG x FLG	0	1
12	1	EACH	4" x 04'-08" FLG x FLG	0	1
21	1	EACH	4" x 06'-00" FLG x PE	0	1

McDade Waterworks, Inc.

Post Office Box 16039 - Tampa, FL 33687-6039
(813) 740-1144 - FAX (813) 627-9387

January 4, 2021

Serving the Water & Wastewater Plant Industry for over 30 Years, Please visit us at:
www.mcdadewaterworks.com

R.J. Sullivan Corp
Attn: Jason Buckwalter

Project: Palm Bay South Regional Water Reclamation Facility
Bid Date: September 10, 2020 @ 5:00 PM
Addendum: 1-9
AIS Requirement - Yes

QTY	SIZE	DESCRIPTION	WEIGHT EACH	UNIT $	EXT $
-4	04" X 00'-08"	FLG X FLG CLASS 53 DIP (C/L, PC)	38	$184.52	-$738.08
-1	04" X 02'-03"	FLG X FLG CLASS 53 DIP W/ 1/2" TAP (C/L, PC)	59	$282.45	-$282.45
-1	04" X 02'-08"	FLG X FLG CLASS 53 DIP W/ 1" TAP (C/L, PC)	72	$303.66	-$303.66
-1	04" X 03'-03"	FLG X FLG CLASS 53 DIP (C/L, PC)	72	$243.06	-$243.06
-1	04" X 03'-08"	FLG X FLG CLASS 53 DIP (C/L, PC)	79	$254.77	-$254.77
-1	04" X 04'-00"	FLG X FLG CLASS 53 DIP (C/L, PC)	79	$254.77	-$254.77
-1	04" X 04'-03"	FLG X FLG CLASS 53 DIP (C/L, PC)	86	$266.48	-$266.48
-1	04" X 04'-08"	FLG X FLG CLASS 53 DIP (C/L, PC)	93	$278.19	-$278.19
-1	04" X 06'-00"	FLG X FLG CLASS 53 DIP (C/L, PC)	93	$278.19	-$278.19
-2	04"	DI COMPANION FLANGE FOR STEEL	15	$37.42	-$74.84
-2	04"	FLG FLEXIBLE CONNECTION (15200-2.01H.) (NEOPRENE TUBE & COVER WITH PAINTED STEEL BACK UP FLANGE W/ 316SS CONTROL ROD ASSEMBLY)		$722.35	-$1,444.70
		TOTAL THIS BID ITEM - TAX NOT INCLUDED			**-$4,419.19**
		DUCTILE TOTAL ALL BID ITEM - TAX NOT INCLUDED	**686.00**		**-$2,974.49**
		RESTRAINT TOTAL ALL BID ITEM - TAX NOT INCLUDED	**0.00**		**$0.00**
		VALVE TOTAL ALL BID ITEM - TAX NOT INCLUDED			**$0.00**
		FAS TOTAL ALL BID ITEM - TAX NOT INCLUDED			**$0.00**
		EXPANSION JOINT TOTAL ALL BID ITEM - TAX NOT INCLUDED			**-$1,444.70**
		COUPLING TOTAL ALL BID ITEM - TAX NOT INCLUDED			**$0.00**
		C-900 / 905 AND SDR-26 / 35 PVC TOTAL ALL BID ITEM - TAX NOT INCLUDED			**$0.00**
		STAINLESS TOTAL ALL BID ITEM - TAX NOT INCLUDED			**$0.00**
		SUPPORT TOTAL ALL BID ITEM - TAX NOT INCLUDED			**$0.00**
		MISC TOTAL ALL BID ITEM - TAX NOT INCLUDED			**$0.00**
		GRAND TOTAL ALL BID ITEM - TAX NOT INCLUDED			**-$4,419.19**

Notes:

1. **All Ductile Iron MJ Fitting Quoted C153 (Compact)**
2. **All Fitting and Valves Quoted Less Accessories**
3. **All Buried Ductile Iron Pipe and MJ Fitting Quoted Bituminous Coated**
4. **All Flange Pipe and Fitting Quoted Prime Coated**
5. **All Ductile Iron Pipe and Fitting Quoted Cement or Protecto 401 Lined as noted above**
6. **All Ductile Iron Fitting (MJ & Flange) Quoted Are Globally Sourced**
7. **All Ductile Iron Run Pipe prices are good for 1 year from Bid Date. After the one year period there will be a price increase of 3% and additional 3% for every 6 month after that. This escalation is from the pipe manufacturer and they have stated that it is not negotiable.**
8. **Due to the volatile raw market *All C-900 PVC, C-905 PVC, HDPE, SDR 35, Sch 80 PVC, Sch 40 PVC, Stainless Steel, Copper & Brass Pipe, Fittings, Valves, etc* will/may need to be re-quoted at the time of purchase. Pricing Subject to Availability.**

QTY	SIZE	DESCRIPTION	WEIGHT EACH	UNIT $	EXT $

***** PVC prices are good till October 9, 2020**

9. **McDade Waterworks, Inc. reserves the right to apply "Price in Effect" at time of delivery due to shortages and/or further tariff declarations by state or federal agencies. McDade Waterworks, Inc will not be responsible for industry price changes or shortages beyond our control as a result of changes to current tariff law.**
10. **Due to the volitility of the raw PVC material market this quotation is valid until_____, at which time the order must be placed or this quotation is automatically voided . Prices are firm if order is released by_____for shipment completed by_____. Pricing and order acceptance is contingent upon the selected PVC manufacturer receiving collectively sufficient orders to meet minimum run requirements . All backorders will be shipped , "Price In Effect" at time of shipment, If for any reason pipe is delivered after the terms of this quotation .**
11. **All valve boxes quoted less extension stem unless noted otherwise.**
12. **Flange Accessories Set Prices are Firm for 14 Days from Bid Date, & Must Ship Within 28 Working Days from Bid Date.**
14. **Pipe Supports - Do not include engineering calculations (ie. wind, seismic, etc). We can recommend someone who can provide this information if requested.**
15. **Line drawings are not included. If needed add $1,000.00 per sheet.**
16. **No Spare Parts for any components on take-off are included, unless noted otherwise.**
17. **Electric Actuators are quoted Open/Close service, Unless stated otherwise.**
18. **Valve warranty for project is (2) years from date of shipment. Extended warranty can be purchased for a additional 1% of the purchase price for each additional year warranty up to 3 year maximum from date of shipment.**

***** DISCLAIMER:***
McDade Waterworks, Inc. reserves the right to increase prices and/or change escalation terms at any time based on the potential of continued cost volatility.

Confidentiality. Both McDade and Customer agree that the terms of this quotation, including the attached pricing are confidential and shall be held in strict confidence by both parties and may not be disclosed unless required by law. Customer agrees not to post or publicly display the terms or the pricing. Customer also agrees that any discussions or negotiations regarding the attached pricing or any changes thereto (including but not limited to future pricing offerings) are also confidential and are pursuant to this provision of confidentiality.

The above quotation is **our** interpretation of the plans and specifications and should be reviewed by **your** firm for accuracy. Prices do not include valve boxes, ext stems, wrenches, start-up services, etc. unless specifically noted in our quotation. Prices are based on full freight allowed truckload shipments to the project. Additional materials ordered will be furnished on a case by case basis.

Terms: Net 30 Days
FOB: S/P - FFA to Jobsite (Based on Terms Above)

Please call should you have any questions or need any additional pricing.

Sincerely,

Mike Worrell

As-Bid Piping

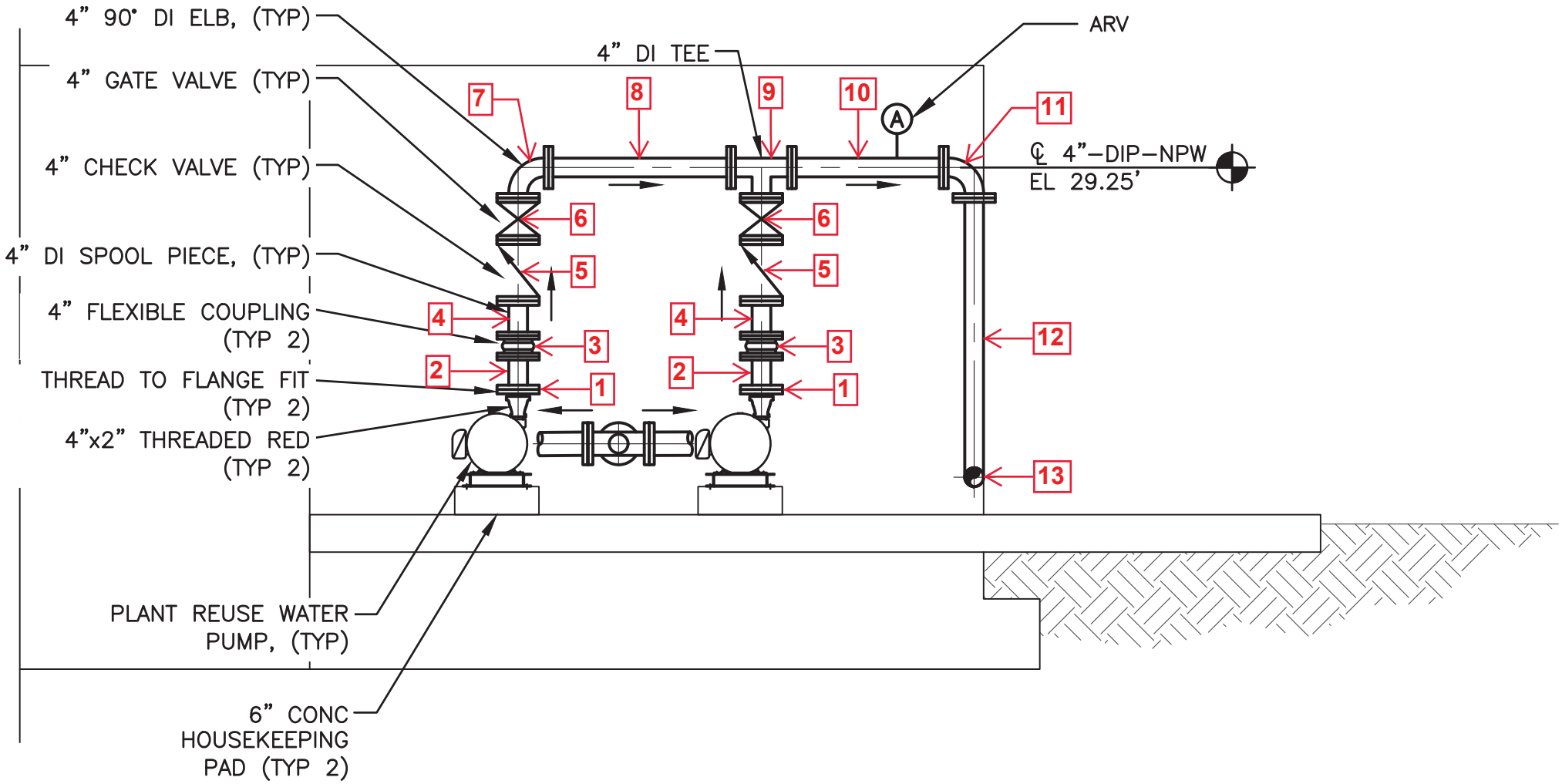

As-Bid Piping

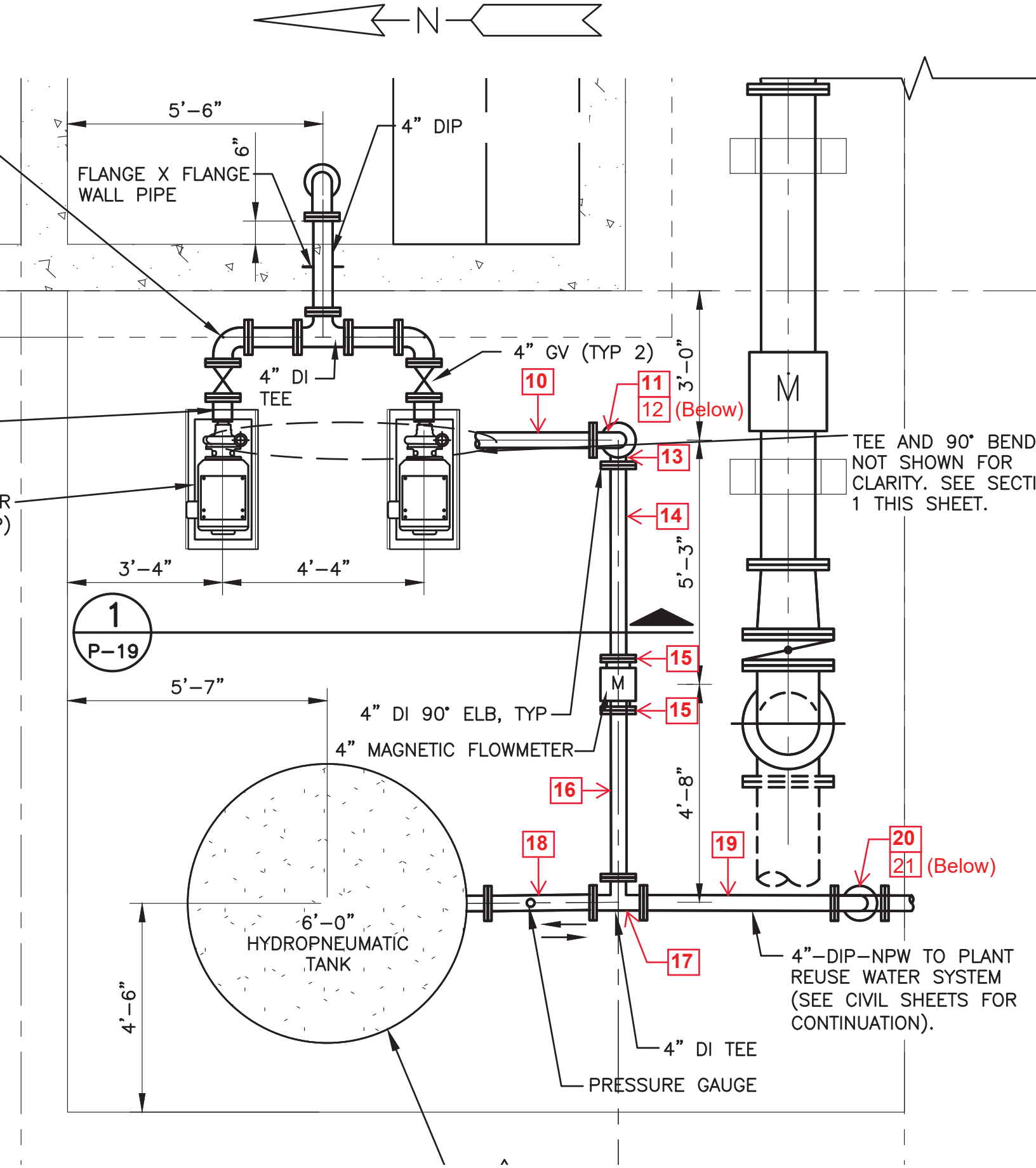

South Regional Water Reclamation Facility
PCO #038 - Odor Control Duct Revisions

Labor & Materials			
Superintendent	59 MH @ $140/MH	$	8,260.00
Foreman	237 MH @ $100/MH	$	23,700.00
Laborer	475 MH @ $75/MH	$	35,625.00
Materials (See Attached List)		$	131,665.94
	Subtotal:	**$**	**199,250.94**
	5% Contractor's Fee: (Agreement, Article 14.4.1.1)	**$**	**9,962.55**
	Labor & Materials Total:	**$**	**209,213.49**
Field Services			
None		$	-
	Subtotal:	**$**	**-**
	5% Contractor's Fee: (Agreement, Article 14.4.1.1)	**$**	**-**
	Field Services Total:	**$**	**-**
Supplemental			
Equipment		$	-
Tax on Materials (7.0%)		$	6,851.61
Additional Bond & Insurance		$	37,788.00
	Subtotal:	**$**	**44,639.61**
	0% Contractor's Fee: (Agreement, Article 14.4.1.2)	**$**	**-**
	Supplemental Total:	**$**	**44,639.61**
Credits			
Superintendent	-40 MH @ $140/MH	$	(5,600.00)
Foreman	-160 MH @ $100/MH	$	(16,000.00)
Laborer	-319 MH @ $75/MH	$	(23,925.00)
Material Credit (See Attached List)		$	(33,785.74)
	Subtotal:	**$**	**(79,310.74)**
	5% Contractor's Fee: (Agreement, Article 14.4.1.3 & 14.4.1.4)	**$**	**(3,965.54)**
	Credits Total:	**$**	**(83,276.28)**

PCO #038 Total: $ 170,576.82
Additional Contract Time Required: 155 days *

***R.J. Sullivan Corp. reserves the right to additional contract time and costs associated with extended overhead, bonds, and insurance once the extent of delays related to this PCO and other outstanding PCOs can be quantified.**

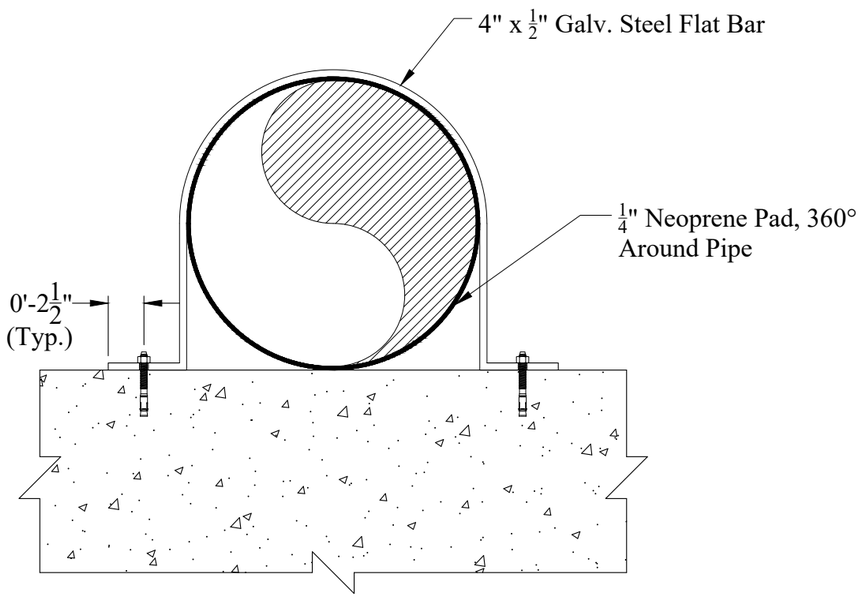

STRAPS FOR 4', 6", & 14" FRP DUCT

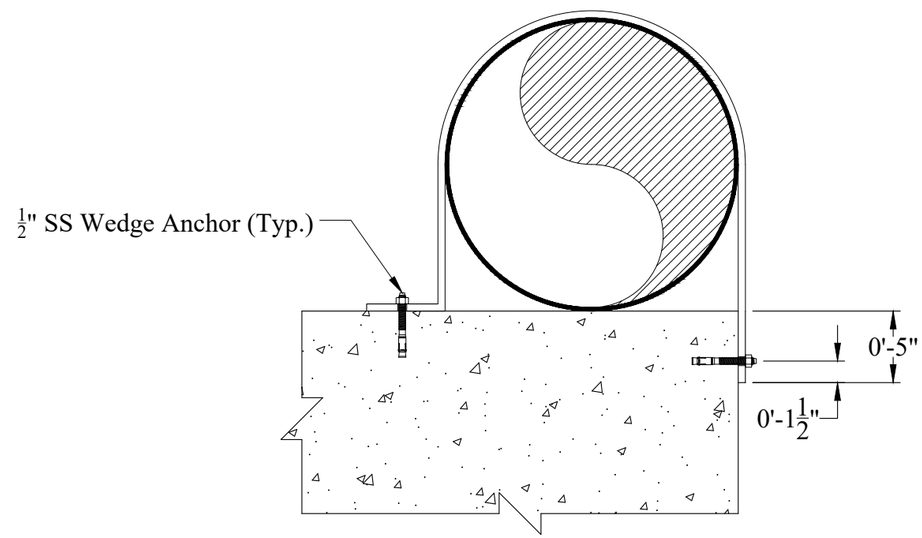

STRAPS FOR 20" FRP DUCT

General Notes

©2022 RJ Sullivan Corp. All rights reserved. These plans are the property of RJ Sullivan Corp. and may not be copied, manipulated, reverse engineered or used for construction without express written permission from RJ Sullivan Corp. Violators will be prosecuted to the fullest extent of the law.

No.	Revision/Issue	Date

rj Sullivan Corp.
GENERAL CONTRACTOR
2001 N.W. 22nd Street • Pompano Beach, FL 33069
Phone 954-975-0388 • Fax 954-975-3333

Designed: JEB
Drawn: JEB
Checked:
Approved:

Project Name
City of Palm Bay
South Regional Water
Reclamation Facility

PCO #038
Revised Odor Control Duct

Project: 390
Date: 7/28/2022
Scale: NTS
Drawing:
Sheet: 1 of 1

Additional Materials

Supplier	Quantity	Item	Unit	Total
BioAir	1	FRP Duct & Accessories	$ 99,600.00	$ 99,600.00
Confast	1	(110) 1/2" x 4" 316 SS Wedge Anchors (40) 5/8" x 5" 316 SS Wedge Anchors	$ 2,899.59	$ 2,899.59
McDade Waterworks	1	Pipe, Fittings, Supports, & Accessories	$ 27,919.95	$ 27,919.95
R.J. Sullivan Corp.	160	1/4" x 4" Neoprene, LF	$ 7.79	$ 1,246.40
			Total:	**$ 131,665.94**

BioAir Solutions, LLC | 110 Kresson-Gibbsboro Road | Suite 303 | Voorhees, NJ 08043
P 856.258.6969 | F 856.258.6975 | www.bioairsolutions.com

CHANGE ORDER REQUEST

Date:	19 March 2024	**From:**	Justin Aboloff
To:	Mickey Bartlett	**Title:**	Senior Project Engineer
Company:	R.J. Sullivan Corp.	**Email:**	jaboloff@bioairsolutions.com
Email:	mbartlett@rjsullivancorp.com	**Doc#:**	COR-003 R1
cc:		**Project:**	P20123 – Palm Bay, FL
Subject:	COR-003 (R1) – Upstream Ductwork (Updated Pricing)		

Dear Mickey,

Below please find BioAir's (revised) firm lump-sum pricing for BioAir to supply the upstream FRP ductwork as drawing P-8. The quotation below is for Fire-Retardant Vinylester resin FRP duct spools, elbows, tees, reducers, transitions, flanges and damper valves highlighted in the latest revision of drawing P-8 (highlighted in yellow). BioAir requires approval of this change order COR-003 (R1) and receipt of a Purchase Order before any design or fabrication can commence. Once BioAir executes COR-003 (R1), BioAir will provide fabrication drawings for approval. Upon the release to fabricate the approved fabrication drawings, BioAir requires approximately **14 - 16 weeks** to manufacture and deliver the equipment to the job site.

Description	Total Price
LOT OF UPSTREAM DUCTWORK SPOOLS, ELBOWS, TEES, REDUCERS, TRANSITIONS, INLET GOOSENECKS, EXTERNAL CONNECTION FLANGES & DAMPER VALVES per drawing P-8; includes field wrap kit materials and shipping to the jobsite.	**$99,600.00**

Below is a list of the quantity of dampers included as well as the number of field joints required (to be completed by the installer):

Duct Size	Damper QTY	Field Joint QTY
Ø24"	-	1
Ø20"	-	6
Ø14"	4	1
Ø8"	-	2
Ø6"	2	6
Ø4"	13	5

Please note that this change order does not include any flexible connections for the ductwork. Due to the fact that FRP ductwork can expand and contract depending on the ambient air temperature, BioAir recommends that Wade Trim include flexible joints during the installation of the ductwork. The most critical areas are for long straight runs and wherever the duct changes direction.

Final Remarks:

- Drawing P-8 does not currently show the latest layout of the BioAir odor control system – with the main item in question being the grease filter – it is completely absent from the drawing. BioAir will supply the two (2) connecting flanges for this component along with the COR-003 (R1) ductwork scope.
- All supplied flanges to be per NBS PS15-69 standard.
- Damper valves will be provided with flanged connections. This is not clearly shown in Drawing P-8.
- Air inlet duct + damper valve for Future Anaerobic Reactor 1A2 was not included in the clouded details for Drawing P-8, nor was it labeled. Wade Trim to advise if the supply of this ductwork gooseneck and damper valve are required.

Terms and Conditions:

- Payment: 20% of COR-003 (R1) shall be due upon receipt of a purchase order, 80% (net 30) shall be due upon delivery of the ductwork and accessories to the job site.
- No taxes are included in the Price above
- The above is only per the requested change; any additional requirements that are not included in the original scope of supply and this change order will not be supplied. All additional costs and engineering time will be at the owner's responsibility.
- Approval of COR-003 (R1) will be a revision to the contract Purchase Order subject to the terms included here.
- **Above pricing offered is valid for 90 days.**
- All other existing contract conditions (including project warranty) remain unchanged.

Exclusions:

- Field installation of FRP duct is outside of BioAir's scope of supply.
- Field balancing of dampers is outside of BioAir's scope of supply.
- Installation hardware and gaskets are not included in BioAir's scope of supply.
- Duct supports are not included in BioAir's scope of supply.
- Flexible joints/connectors are not included in BioAir's scope of supply.

Feel free to let me know should you have any questions.

Best Regards,
BioAir Solutions, LLC

Justin Aboloff - Senior Project Engineer

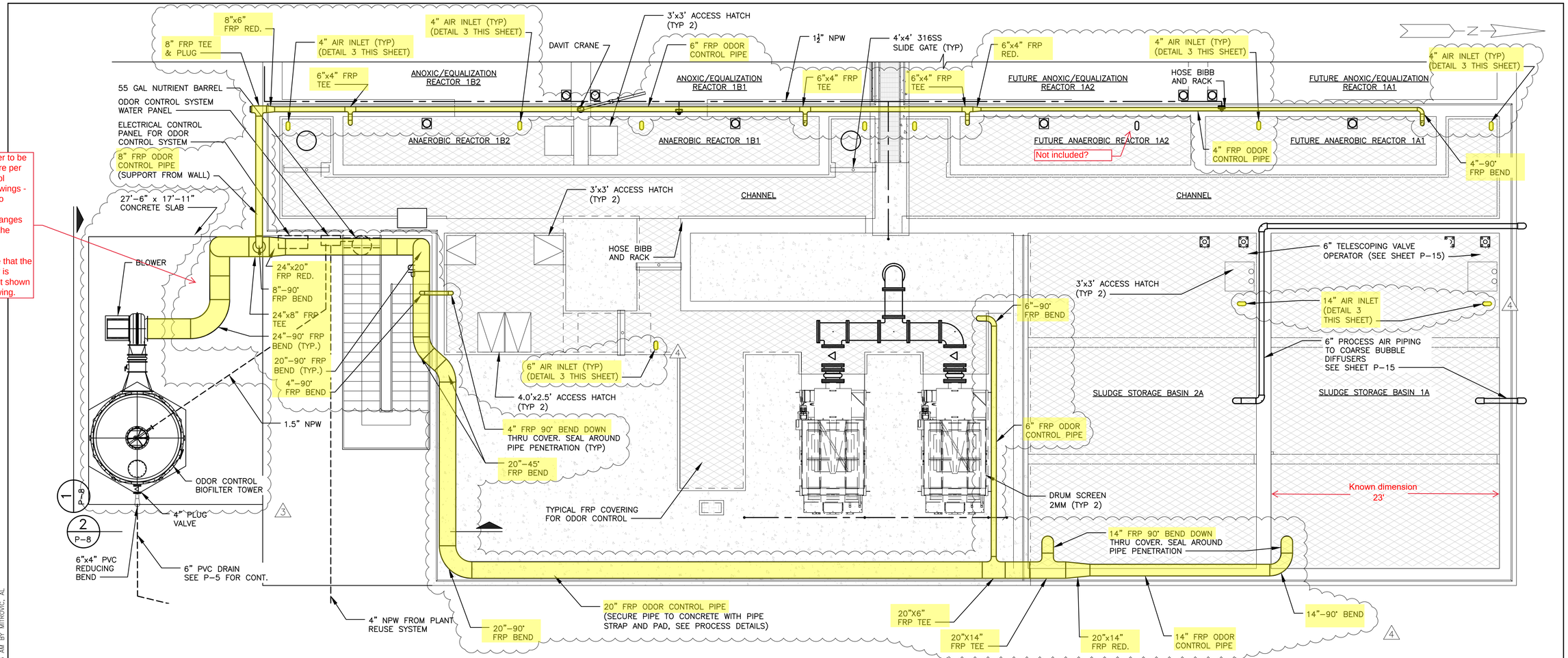

Grease Filter to be installed here per Odor Control System drawings - Fabricator to provide (2) additional flanges for making the connection.

Please note that the grease filter is currently not shown on this drawing.

ODOR CONTROL SYSTEM PLAN

SCALE: 3/16"=1'-0"

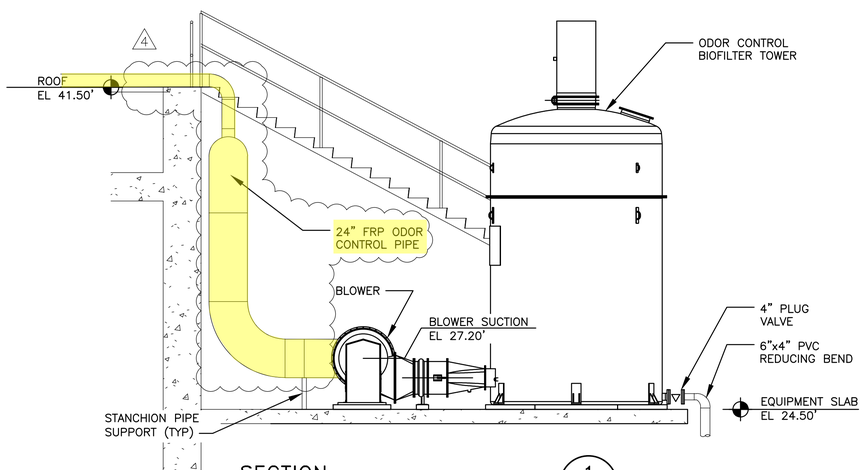

SECTION 1/P-8

SCALE: 1/4"=1'-0"

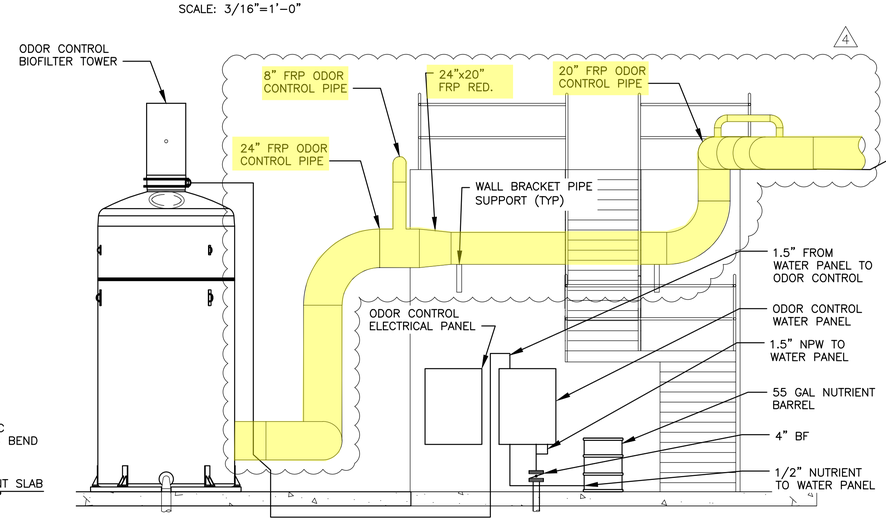

SECTION 2/P-8

SCALE: 1/4"=1'-0"

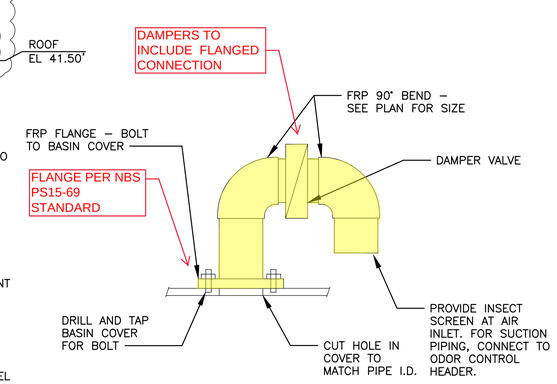

TYPICAL AIR INLET DETAIL 3/P-8

SCALE: NTS

REV#	DATE	DESCRIPTION	BY
A	09/07/18	FOR BID	MSL
B	06/27/19	REVISIONS PER SITE PLAN REVIEW COMMENTS	MSL
1	11/16/20	ADDENDUM #6 CHANGES	MSL
2	11/16/20	ADDENDUM #3 CHANGES	MSL
3	10/18/22	ODOR CONTROL SHOP DRAWING CHANGES	AM
4	11/02/22	ODOR CONTROL DUCTWORK CHANGES	AM

NOT VALID FOR CONSTRUCTION UNLESS SIGNED AND DATED

WADE TRIM
3790 Dixie Highway NE, Suite D
Palm Bay, FL 32905
321.728.3389
www.wadetrim.com
Certificate of Authorization No. 33952

CITY OF PALM BAY, FLORIDA
PALM BAY SOUTH REGIONAL WATER RECLAMATION FACILITY

ODOR CONTROL SYSTEM PLAN, SECTIONS AND DETAILS

TRAVIS B. PARSONS, P.E.
FLORIDA LICENSE NO. 83473

PALM BAY SOUTH REGIONAL WATER RECLAMATION FACILITY

JOB NO. PBU2123-01L

SHEET P-8

© Wade Trim Group, Inc.

PROJECT MANAGER: OSCAR DUARTE
C:\PW_WORK\WADE-TRIM_AMITROVIC\D0826789\PFP-PLTS-P-08_ODOR CONTROL SYSTEM.DWG - P-8 - PLOTTED 11/2/2022 11:03 AM BY MITROVIC, AL
FIELD BOOK INFORMATION:-

FREE SHIPPING For orders $25 or more within the USA

7

CONFAST® CONCRETE FASTENERS™

Find your product(s), SKU, brand, or articles

Home / Your Cart

Your Cart (7 items)

ITW/RedHead®

1/2" x 4-1/4" Red Head Trubolt 316 Stainless Steel SWW-1242, 25/Box

SKU

WAS-31612414;R

Price	Quantity	Total
$444.29	5	**$2,221.45**

ITW/RedHead®

5/8" x 5" Red Head Trubolt 316 Stainless Steel SWW-5850, 10/Box

SKU

WAS-316585;R

Price	Quantity	Total
$324.07	2	**$648.14**

Sign in to save your cart

Total Items:	7
Subtotal:	$2,869.59
Shipping:	$30.00
Tax:	$202.97
Coupon Code:	Add Coupon
Grand total:	**$3,102.56**

Check out

-- or use --

amazon pay

USE YOUR AMAZON ACCOUNT

G Pay

McDade Waterworks, Inc.

Post Office Box 16039 - Tampa, FL 33687-6039
(813) 740-1144 - FAX (813) 627-9387

January 19, 2024

Serving the Water & Wastewater Plant Industry for over 30 Years, Please visit us at:
www.mcdadewaterworks.com

R.J. Sullivan Corp.
Attn: Jason Buckwalter

See

Project Name: Palm Bay SRWRF PCO #038 Control Duct Revisions
McDade Project #: P20-232
Original Bid Date: September 10, 2020 @ 5:00 PM
Original Addendums: 1-9
ARRA, AIS, or Domestic Requirement - Yes

BID ITEM	QTY	SIZE	DESCRIPTION	WEIGHT EACH	UNIT $	EXT $
	34	04"	1/8" FULL FACE VITON GASKET (PROVIDING VITON GASKETS IN LIEU OF SPECIFIED FLEXIBLE PLASTICIZED PVC GASKET)		$35.73	$1,214.82
	5	06"	1/8" FULL FACE VITON GASKET (PROVIDING VITON GASKETS IN LIEU OF SPECIFIED FLEXIBLE PLASTICIZED PVC GASKET)		$53.36	$266.80
	10	14"	1/8" FULL FACE VITON GASKET (PROVIDING VITON GASKETS IN LIEU OF SPECIFIED FLEXIBLE PLASTICIZED PVC GASKET)		$157.07	$1,570.70
	1	24"	1/8" FULL FACE VITON GASKET (PROVIDING VITON GASKETS IN LIEU OF SPECIFIED FLEXIBLE PLASTICIZED PVC GASKET)		$325.30	$325.30
	34	04"	316SS A193 GRADE B8M BOLTS, GRADE 8M NUTS, & WASHERS (3/8" X 1-1/2" BOLTS, QTY (4) BOLTS)		$34.29	$1,165.86
	5	06"	316SS A193 GRADE B8M BOLTS, GRADE 8M NUTS, & WASHERS (3/8" X 1-1/2" BOLTS, QTY (8) BOLTS)		$71.43	$357.15
	10	14"	316SS A193 GRADE B8M BOLTS, GRADE 8M NUTS, & WASHERS (3/8" X 1-3/4" BOLTS, QTY (12) BOLTS)		$107.14	$1,071.40
	1	24"	316SS A193 GRADE B8M BOLTS, GRADE 8M NUTS, & WASHERS (3/8" X 2" BOLTS, QTY (20) BOLTS)		$207.14	$207.14
	NOTE: ANGLE FOR WALL BRACKETS MAY BE DFAR'S COMPLIANT. DOMESTIC ANGLE STOCK IS LIMITED.					
	1	24" X 02'-08"	316SS ADJUSTABLE SADDLE TYPE PIPE SUPPORT W/ U-BOLT FOR 24-3/8" FRP PIPE OD (PER PLANS SHEET P-29)		$2,258.67	$2,258.67
	10	04"	HDG PIPE STRAP FOR CONCRETE PIPE SUPPORT FOR 4-1/4" FRP PIPE OD (04" X 1/2" STEEL FLAT BAR)(PER CONCRETE PIPE SUPPORT DETAIL BY RJS, PDF PG.2)		$68.00	$680.00
	21	06"	HDG PIPE STRAP FOR CONCRETE PIPE SUPPORT FOR 6-1/4" FRP PIPE OD (04" X 1/2" STEEL FLAT BAR)(PER CONCRETE PIPE SUPPORT DETAIL BY RJS, PDF PG.2)		$74.67	$1,568.07
	5	14"	HDG PIPE STRAP FOR CONCRETE PIPE SUPPORT FOR 14-1/4" FRP PIPE OD (04" X 1/2" STEEL FLAT BAR)(PER CONCRETE PIPE SUPPORT DETAIL BY RJS, PDF PG.2)		$118.67	$593.35
	17	20"	HDG PIPE STRAP FOR CONCRETE PIPE SUPPORT FOR 20-3/8" FRP PIPE OD (04" X 1/2" STEEL FLAT BAR)(PER CONCRETE PIPE SUPPORT DETAIL BY RJS, PDF PG.1)		$158.67	$2,697.39
	3	06"	316SS WALL BRACKET PIPE SUPPORT W/ U-BOLT FOR 6-1/4" FRP PIPE OD (PER PLANS SHEET P-29)		$997.33	$2,991.99
	7	20"	316SS WALL BRACKET PIPE SUPPORT W/ U-BOLT FOR 20-3/8" FRP PIPE OD (PER PLANS SHEET P-29)		$1,457.33	$10,201.31
	1	LUMP SUM	LUMP SUM FREIGHT TO JOBSITE		$750.00	$750.00

ESTIMATED LEAD TIME ON MATERIALS:
1. FLG ACCY SET:
2. PIPE SUPPORTS: 5-6 WEEKS

BID ITEM	QTY	SIZE	DESCRIPTION	WEIGHT EACH	UNIT $	EXT $
			TOTAL THIS BID ITEM - TAX NOT INCLUDED			**$27,919.95**
			FAS TOTAL ALL BID ITEM - TAX NOT INCLUDED			**$6,929.17**
			SUPPORT TOTAL ALL BID ITEM - TAX NOT INCLUDED			**$20,990.78**
			GRAND TOTAL ALL BID ITEM - TAX NOT INCLUDED			**$27,919.95**

Notes:

1. **All Materials Quoted Are Domestically Sourced**
2. **McDade Waterworks, Inc. reserves the right to apply "Price in Effect" at time of delivery due to shortages and/or further "Force Majeure" declarations by manufacturer(s). McDade Waterworks, Inc will not be responsible for industry price changes or shortages beyond our control.**
3. **Flange Accessories Set Prices are Firm for 14 Days from Bid Date, & Must Ship Within 28 Working Days from Bid Date.**
4. **Pipe Supports - Do not include engineering calculations (ie. wind, seismic, etc). We can recommend someone who can provide this information if requested.**

***** DISCLAIMER:***
McDade Waterworks, Inc. reserves the right to increase prices and/or change escalation terms at any time based on the potential of continued cost volatility.

Confidentiality. Both McDade and Customer agree that the terms of this quotation, including the attached pricing are confidential and shall be held in strict confidence by both parties and may not be disclosed unless required by law. Customer agrees not to post or publicly display the terms or the pricing. Customer also agrees that any discussions or negotiations regarding the attached pricing or any changes thereto (including but not limited to future pricing offerings) are also confidential and are pursuant to this provision of confidentiality.

The above quotation is **our** interpretation of the plans and specifications and should be reviewed by **your** firm for accuracy. Prices do not include valve boxes, ext stems, wrenches, start-up services, etc. unless specifically noted in our quotation. Prices are based on full freight allowed truckload shipments to the project. Additional materials ordered will be furnished on a case by case basis.

Terms: Net 30 Days
FOB: S/P - FFA to Jobsite (Based on Terms Above)

Please call should you have any questions or need any additional pricing.

Sincerely,

Christian Fracchia

Material Credit

Supplier	Quantity	Item	Unit	Total
Marsh Fasteners	-4	1/2" x 4" 316 SS Wedge Anchors	$ 4.65	$ (18.60)
Marsh Fasteners	-40	5/8" x 5" 316 SS Wedge Anchors	$ 9.25	$ (370.00)
Marsh Fasteners	-82	3/4" x 12" Rods 316 SS	$ 4.75	$ (389.50)
Marsh Fasteners	-82	3/4" Flat Washers 316 SS	$ 0.35	$ (28.70)
Marsh Fasteners	-82	3/4" Hex Nuts 316 SS	$ 0.50	$ (41.00)
McDade Waterworks	-1	Pipe, Fittings, Supports, & Accessories	$ 10,408.82	$ (10,408.82)
Midwestern Fabricators	-1	FRP Duct & Accessories	$ 22,100.00	$ (22,100.00)
R.J. Sullivan Corp.	-80	1/4" x 4" Neoprene, LF	$ 4.339	$ (347.12)
R.J. Sullivan Corp.	-82	Epoxy	$ 1.00	$ (82.00)
			Total:	**$ (33,785.74)**

Marsh Fasteners
127 Fern Street

Jupiter, FL 33458

1 08/28/20 200571A

Mickey Bartlett
R J Sullivan Corp.
2201 NW 22nd Street
Pompano Beach, FL 33069

25798 KAT/CS A / QUOTATION

(954) 975-0388 0.0 0 UPC

VISIT US AT WWW.MARSHFASTENERS.COM FOR ALL YOUR STAINLESS STEEL NEEDS!

44	BST1/2-13X 150	1/2-13 x 1 1/2 Hex Bolts 316 Stainless	0.6000	--	26.40
167	NHST1/2-13	1/2-13 Finish Hex Nut 316 Stainless	0.1500	--	25.05
136	NHST3/4-10	3/4-10 Finish Hex Nut 316 Stainless	0.5000	--	68.00
16	NHST5/8-11	5/8-11 Finish Hex Nut 316 Stainless	0.3000	--	4.80
17	TRST1/2-13 X6.00	1/2-13 x 6' Threaded Rod 316 Stainless	17.2500	--	293.25
12	TRST3/4-10 X6.00	3/4-10 x 6' Threaded Rod 316 Stainless	28.5000 ($28.50/72" = $4.75/12")	--	342.00
14	TRST5/8-11 X6.00	5/8-11 x 6' Threaded Rod 316 Stainless	21.0000	--	294.00
771	WEGST1/2X4 25	1/2-13 x 4 1/4 Wedge Anchor 316 Stainless 25/Box	4.6500	--	3585.15
288	WEGST5/8X5 00	5/8-11 x 5 Wedge Anchors 316 Stainless 20/Box	9.2500	--	2664.00
16	WFDTS1/2X2 00	1/2 x 2 Fender Washer Type 316 Stainless	0.4500	--	7.20
167	WFTS1/2	1/2 Flat Washers 316 Stainless	0.0800	--	13.36
136	WFTS3/4	3/4 Flat Washers 316 Stainless	0.3500	--	47.60
16	WFTS5/8	5/8 Flat Washer 316 Stainless	0.1600	--	2.56

MERCHANDISE QUOTATION TOTAL $	7373.37
SHIPPING & HANDLING $	415.27
STATE SALES TAX $	442.41
COUNTY SALES TAX $	73.73
QUOTATION TOTAL $	8304.78

McDade Waterworks, Inc.

Post Office Box 16039 - Tampa, FL 33687-6039
(813) 740-1144 - FAX (813) 627-9387

January 4, 2021

Serving the Water & Wastewater Plant Industry for over 30 Years, Please visit us at:
www.mcdadewaterworks.com

R.J. Sullivan Corp
Attn: Jason Buckwalter

Project: Palm Bay South Regional Water Reclamation Facility
Bid Date: September 10, 2020 @ 5:00 PM
Addendum: 1-9
AIS Requirement - Yes

QTY	SIZE	DESCRIPTION	WEIGHT EACH	UNIT $	EXT $
-21	03"	FLG ACCESSORY SET FOR FRP DUCT (15895-2.02J.3.&4.) (316SS A193 GRADE B8M BOLTS, GRADE 8M NUTS & WASHERS W/ 1/8" FULL FACE PLASTICIZED PVC GASKET) (4 EA 3/8" X 2") *(WE COULDN'T FIND ANY INFORMATION REGARDING PLASTICIZED PVC GASKET, WE ARE QUOTING EPDM INSTEAD)*		$26.54	-$557.34
-2	04"	FLG ACCESSORY SET FOR FRP DUCT (15895-2.02J.3.&4.) (316SS A193 GRADE B8M BOLTS, GRADE 8M NUTS & WASHERS W/ 1/8" FULL FACE PLASTICIZED PVC GASKET) (4 EA 3/8" X 2") *(WE COULDN'T FIND ANY INFORMATION REGARDING PLASTICIZED PVC GASKET, WE ARE QUOTING EPDM INST*		$27.63	-$55.26
-10	08"	FLG ACCESSORY SET FOR FRP DUCT (15895-2.02J.3.&4.) (316SS A193 GRADE B8M BOLTS, GRADE 8M NUTS & WASHERS W/ 1/8" FULL FACE PLASTICIZED PVC GASKET) (8 EA 3/8" X 2") *(WE COULDN'T FIND ANY INFORMATION REGARDING PLASTICIZED PVC GASKET, WE ARE QUOTING EPDM INSTEAD)*		$54.36	-$543.60
-1	14"	FLG ACCESSORY SET FOR FRP DUCT (15895-2.02J.3.&4.) (316SS A193 GRADE B8M BOLTS, GRADE 8M NUTS & WASHERS W/ 1/8" FULL FACE PLASTICIZED PVC GASKET) (12 EA 3/8" X 2-1/4") *(WE COULDN'T FIND ANY INFORMATION REGARDING PLASTICIZED PVC GASKET, WE ARE QUOTING EPDM INSTEAD)*		$86.37	-$86.37
-1	14" X 02'-08"	316 STAINLESS STEEL STANCHION PIPE SUPPORT W/ STRAP, 14" PIPE, 2'-8" TO CENTER, DETAIL ON P-29		$816.25	-$816.25
-13	03"	1/2" X 4" GALVANIZED STEEL FLAT BAR PIPE STRAP FOR 3" PIPE, DETAIL FOR CONCRETE PIPE SUPPORT ON P-29		$47.50	-$617.50
-6	04"	1/2" X 4" GALVANIZED STEEL FLAT BAR PIPE STRAP FOR 4" PIPE, DETAIL FOR CONCRETE PIPE SUPPORT ON P-29		$48.75	-$292.50
-7	08"	1/2" X 4" GALVANIZED STEEL FLAT BAR PIPE STRAP FOR 8" PIPE, DETAIL FOR CONCRETE PIPE SUPPORT ON P-29		$55.00	-$385.00
-15	12"	1/2" X 4" GALVANIZED STEEL FLAT BAR PIPE STRAP FOR 12" PIPE, DETAIL FOR CONCRETE PIPE SUPPORT ON P-29		$61.25	-$918.75

QTY	SIZE	DESCRIPTION	WEIGHT EACH	UNIT $	EXT $
-3	03" X 01'-00"	316 STAINLESS STEEL PIPE SUPPORT WALL BRACKET, 3" PIPE, DETAIL ON P-29		$345.00	-$1,035.00
-7	12" X 01'-06"	316 STAINLESS STEEL PIPE SUPPORT WALL BRACKET, 12" PIPE, DETAIL ON P-29		$728.75	-$5,101.25
		TOTAL THIS BID ITEM - TAX NOT INCLUDED			**-$10,408.82**

DUCTILE TOTAL ALL BID ITEM - TAX NOT INCLUDED	**0.00**	**$0.00**
RESTRAINT TOTAL ALL BID ITEM - TAX NOT INCLUDED	**0.00**	**$0.00**
VALVE TOTAL ALL BID ITEM - TAX NOT INCLUDED		**$0.00**
FAS TOTAL ALL BID ITEM - TAX NOT INCLUDED		**-$1,242.57**
EXPANSION JOINT TOTAL ALL BID ITEM - TAX NOT INCLUDED		**$0.00**
COUPLING TOTAL ALL BID ITEM - TAX NOT INCLUDED		**$0.00**
C-900 / 905 AND SDR-26 / 35 PVC TOTAL ALL BID ITEM - TAX NOT INCLUDED		**$0.00**
STAINLESS TOTAL ALL BID ITEM - TAX NOT INCLUDED		**$0.00**
SUPPORT TOTAL ALL BID ITEM - TAX NOT INCLUDED		**-$9,166.25**
MISC TOTAL ALL BID ITEM - TAX NOT INCLUDED		**$0.00**
GRAND TOTAL ALL BID ITEM - TAX NOT INCLUDED		**-$10,408.82**

Notes:

1. **All Ductile Iron MJ Fitting Quoted C153 (Compact)**
2. **All Fitting and Valves Quoted Less Accessories**
3. **All Buried Ductile Iron Pipe and MJ Fitting Quoted Bituminous Coated**
4. **All Flange Pipe and Fitting Quoted Prime Coated**
5. **All Ductile Iron Pipe and Fitting Quoted Cement or Protecto 401 Lined as noted above**
6. **All Ductile Iron Fitting (MJ & Flange) Quoted Are Globally Sourced**
7. **All Ductile Iron Run Pipe prices are good for 1 year from Bid Date. After the one year period there will be a price increase of 3% and additional 3% for every 6 month after that. This escalation is from the pipe manufacturer and they have stated that it is not negotiable.**
8. **Due to the volatile raw market *All C-900 PVC, C-905 PVC, HDPE, SDR 35, Sch 80 PVC, Sch 40 PVC, Stainless Steel, Copper & Brass Pipe, Fittings, Valves, etc* will/may need to be re-quoted at the time of purchase. Pricing Subject to Availability.**
   ***** PVC prices are good till October 9, 2020**
9. **McDade Waterworks, Inc. reserves the right to apply "Price in Effect" at time of delivery due to shortages and/or further tariff declarations by state or federal agencies. McDade Waterworks, Inc will not be responsible for industry price changes or shortages beyond our control as a result of changes to current tariff law.**
10. **Due to the volitility of the raw PVC material market this quotation is valid until_____, at which time the order must be placed or this quotation is automatically voided . Prices are firm if order is released by_____for shipment completed by_____. Pricing and order acceptance is contingent upon the selected PVC manufacturer receiving collectively sufficient orders to meet minimum run requirements . All backorders will be shipped , "Price In Effect" at time of shipment, If for any reason pipe is delivered after the terms of this quotation .**
11. **All valve boxes quoted less extension stem unless noted otherwise.**
12. **Flange Accessories Set Prices are Firm for 14 Days from Bid Date, & Must Ship Within 28 Working Days from Bid Date.**
14. **Pipe Supports - Do not include engineering calculations (ie. wind, seismic, etc). We can recommend someone who can provide this information if requested.**
15. **Line drawings are not included. If needed add $1,000.00 per sheet.**
16. **No Spare Parts for any components on take-off are included, unless noted otherwise.**
17. **Electric Actuators are quoted Open/Close service, Unless stated otherwise.**
18. **Valve warranty for project is (2) years from date of shipment. Extended warranty can be purchased for a additional 1% of the purchase price for each additional year warranty up to 3 year maximum from date of shipment.**

***** DISCLAIMER:***
McDade Waterworks, Inc. reserves the right to increase prices and/or change escalation terms at any time based on the potential of continued cost volatility.

Confidentiality. Both McDade and Customer agree that the terms of this quotation, including the attached pricing are confidential and shall be held in strict confidence by both parties and may not be disclosed unless required by law. Customer agrees not to post or publicly display the terms or the pricing. Customer also agrees that any discussions or negotiations regarding the attached pricing or any changes thereto (including but not limited to future pricing offerings) are also confidential and are pursuant to this provision of confidentiality.

The above quotation is **our** interpretation of the plans and specifications and should be reviewed by **your** firm for accuracy. Prices do not include valve boxes, ext stems, wrenches, start-up services, etc. unless specifically noted in our quotation. Prices are based on full freight allowed truckload shipments to the project.

QTY	SIZE	DESCRIPTION	WEIGHT EACH	UNIT $	EXT $

Additional materials ordered will be furnished on a case by case basis.

Terms: Net 30 Days
FOB: S/P - FFA to Jobsite (Based on Terms Above)

Please call should you have any questions or need any additional pricing.

Sincerely,

Mike Worrell

McDade Waterworks, Inc.

September 9th 2020

RE: Palm Bay South Regional Water Reclamation Facility
Palm Bay, Florida
Wade Trim
Bid Section: 158985 – Fiberglass Ductwork

We appreciate this opportunity to provide the following proposal for the design, fabrication and delivery of the following FRP Ductwork

Specification exceptions and exclusions:

1.02-A	Midwestern Fabricators is proposing as an equal
1.04	Site storage and handling is the responsibility of the contractor
2.02-K	Pipe hangers and supports are not included
2.03-A	Dampers will be manufactured by Midwestern Fabricators
3.01	Installation is not included
3.02	Site testing and balancing is the responsibility of the contractor

Scope of supply: (drawings: P-5 & P-8)

- All 3" dia. FRP ductwork from the Anaerobic Reactor 1B1 & 1B2 cover penetrations to the 14" reducer
- All 3", 4", 8" & 12" dia. FRP ductwork from the two (2) sludge storage basins, drum screen and grit removal cover penetrations to the 14" reducer
- All 14" dia. FRP ductwork from the reducer to the inlet of Blower
    - Accessories:
        - Plug:
            - 3" dia. = 1
        - Dampers:
            - Inline Control type:
                - 3" dia. = 8
                - 4" dia. = 1
                - 8" dia. = 4
        - Air Inlets per detail 3 dwg P-8:
            - 3" dia. = 5
            - 8" dia. = 2
        - Slip on Flexible connections:
            - 3" dia. = 1
            - 12" dia. = 1
            - 14" dia. = 1
        - Butt and Wrap Field Joints:

Midwestern Fabricators, Inc.
1235 so Pioneer Road – Salt Lake City, UT 84104
801-708-7254 ext 104 – jeff@mwf-frp.com

- 3” dia. = 7
- 4” dia. = 2
- 8” dia. = 3
- 12” dia. = 6
- 14” dia. = 2

(Note: we are manufacturing shop spool sections to minimize installation labor. The above noted butt and wrap joints are the total that is needed to be done by the installer)

Pricing for the above FRP Ductwork delivered to the jobsite in Palm Bay, FL is:

$ 22,100.00

Typical Time Frames:
Submittal: 4 weeks ARO
Fabrication: 16 weeks ADA
Time frames are dependent on backlog at time of order and fabrication release

Payment Terms: 100% Net 30 days from shipment or notification of completion
Quote Validation: 45 days

Exclusions:
- Hangers
- Supports
- Fasteners
- Gaskets
- Site verification of dimensions
- Installation
- Manufacturer site services, testing, training and inspection
- Sales Tax

If you have any questions regarding our proposal, please feel free to contact us.

Regards,
Jeff Bevan

Proposal

Midwestern Fabricators, Inc.
1235 so Pioneer Road – Salt Lake City, UT 84104
801-708-7254 ext 104 – jeff@mwf-frp.com

Midwestern Fabricators, Inc. Conditions of Sale

All proposals are based on, and all products are sold on the following terms, conditions and procedures.

THIS PROPOSAL PRICE - is firm if customer's order is placed within forty five (45) days from the date of the proposal. Pricing is quoted in U.S. dollars. Prices are subject to change and buyer agrees to pay any change to pricing due to deviation from items listed on this proposal, changes to submitted items, escalated pricing to raw materials, freight and tariffs.

Payment Terms - Buyer agrees to pay 100% of the purchase price within 30 days of invoiced date. Late fees will be added to invoice total if buyer fails to pay fully the invoice by the due date.

DELIVERY TIME – The time of delivery stated on the proposal face is Midwestern Fabricators, Inc. best estimate and is subject to change depending on current fabrication backlog at time of order and submittal acceptance/release for fabrication. While we strive to diligently meet the dates listed at the time of proposal, Midwestern Fabricators is not liable for any delay in shipment from any cause whatsoever and Purchaser agrees not to make any such claim.

ACCEPTANCE – Acceptance of this proposal whether by a separate purchase order or by other means shall constitute an acknowledgement of the quotation as written and an acceptance of the terms and conditions thereof. This Agreement is governed by and subject to the laws of the State of Utah.

SECURITY INTEREST – Until all amounts due hereunder have been paid in full, Midwestern Fabricators, Inc. has a security interest in said equipment and proceeds thereof and has all rights of a secured party under the Uniform Commercial Code including, without limitation, the right to take possession of said equipment without legal process and the right to require Buyer to assemble said equipment and make it available to Midwestern Fabricators, Inc. at a place reasonably convenient to both parties. At Midwestern Fabricators, Inc request, Buyer shall execute any financing statement or statements submitted by Midwestern Fabricators, Inc. in order that Midwestern Fabricators, Inc. security interest in said equipment may be perfected.

WARRANTY – Midwestern Fabricators, Inc. warrants only that said equipment is free from defects in materials and workmanship as set forth in Manufacturer's Certificate of Warranty furnished to Buyer at the time of final shipment. Midwestern Fabricators, Inc. makes no other warranty concerning said equipment beyond that set forth in said Certificate and expressly disclaims any warranty of merchantability or fitness for any particular purpose not described in the applicable drawings and specifications.
Midwestern Fabricators, Inc. sole responsibility with respect to any equipment which proves to be defective as to materials or workmanship is either to replace or to repair the same as is set forth in said Certificate of Warranty. Unless authorized in writing by Midwestern Fabricators, Inc., Midwestern Fabricators, Inc. is not responsible for any charge or expense incurred for the modification, servicing or adjusting of said equipment after the same has been delivered to Buyer.

Midwestern Fabricators, Inc.
1235 so Pioneer Road – Salt Lake City, UT 84104
801-708-7254 ext 104 – jeff@mwf-frp.com

LIABILITY OF SELLER – Midwestern Fabricators, Inc. is not liable in any event hereunder for any consequential, incidental or liquidated damages or penalties.

CANCELLATION – Should Buyer cancel this agreement without Midwestern Fabricators, Inc. prior written consent, Midwestern Fabricators, Inc. may, at its option, recover from Buyer a cancellation charge of not less than 20% of the purchase price hereunder, as well as an additional costs associated with drawings, engineering work, raw material purchases, etc.

STORAGE – If at such time, within or after the estimated shipment period specified on the face hereof, Midwestern Fabricators, Inc. notifies Buyer that said equipment is ready to be shipped Buyer requests a delay in shipment. Midwestern Fabricators, Inc. may, at its option, agree to store said equipment for a period of time determined by Midwestern Fabricators, Inc., provided that such agreement will not affect Buyer's obligation to pay in full all invoices as they become due, and provided further that for each month, or portion thereof, said equipment is so stored by Midwestern Fabricators, Inc., Buyer shall pay to Midwestern Fabricators, Inc. as a storage fee an amount equal to 1% of the balance due hereunder.

DRAWINGS, ILLUSTRATIONS AND MANUALS – Catalog and proposal drawings, bulletins, and other accompanying literature are solely for purpose of general style, arrangement and approximate dimensions. Unless otherwise stated on our proposal, buyer is responsible to verify and approve submitted dimensions.
Submittal for approval, if required, will be made after receipt of complete information from Buyer. Installation, maintenance and operation manuals will be furnished in the number of copies specified.

PERMITS, LICENSES – Buyer at its sole cost and expense shall obtain all building or other permits or licenses with respect to the installation and operation of said equipment required by a federal, state or local governmental body.

Taxes – Unless otherwise stated in the proposal Midwestern Fabricators, Inc. is not including sales tax and buyer is responsible for all taxes. Tax exemption certificates, if applicable, are to be provided by the Buyer to Midwestern Fabricators, Inc. for record keeping.

By signing this document, the Buyer agrees to all above Terms and Conditions and to purchase the items listed in the scope of supply.

Company: _____ Midwestern Fabricators, Inc.

Name: _____

Signature: _____ _____

Jeff Bevan

Date: _____ Date: _____

PO #: _____

Proposal

Midwestern Fabricators, Inc.
1235 so Pioneer Road – Salt Lake City, UT 84104
801-708-7254 ext 104 – jeff@mwf-frp.com

South Regional Water Reclamation Facility
PCO #040 - Force Main Piping Changes at Road Crossing

Labor & Materials

Superintendent	12 MH @ $140/MH	$	1,680.00
Foreman	12 MH @ $100/MH	$	1,200.00
Laborer	36 MH @ $75/MH	$	2,700.00
Materials		$	8,652.22
	Subtotal:	**$**	**14,232.22**
	5% Contractor's Fee: (Agreement, Article 14.4.1.1)	**$**	**711.61**
	Contractor Total:	**$**	**14,943.83**

Field Services

Central Florida Underground		$	51,620.00
	Subtotal:	**$**	**51,620.00**
	5% Contractor's Fee: (Agreement, Article 14.4.1.1)	**$**	**2,581.00**
	Subcontractor Total:	**$**	**54,201.00**

Supplemental

Equipment (Excavator 2 days @ $800/day, Loader 2 days @$500/day, & Crane 2 days @$1,500/day)		$	5,600.00
Tax on Materials (7.0%)		$	605.66
Additional Bond & Insurance		$	1,174.20
	Subtotal:	**$**	**7,379.86**
	0% Contractor's Fee: (Agreement, Article 14.4.1.2)	**$**	**-**
	Other Total:	**$**	**7,379.86**

Credits

Central Florida Underground (As Bid)		$	(47,560.00)
	Subtotal:	**$**	**(47,560.00)**
	5% Contractor's Fee: (Agreement, Article 14.4.1.3 & 14.4.1.4)	**$**	**(2,378.00)**
	Credits Total:	**$**	**(49,938.00)**

PCO #040 Total:	**$**	**26,586.69**
Additional Contract Time Required: 2 days		

6520 Harney Road - Tampa, FL 33610
Post Office Box 16039 - Tampa, FL 33687-6039
(813) 740-1144 - FAX (813) 627-9387

Serving the Water & Wastewater Plant Industry for over 30 Years

To:	RJ SULLIVAN	Fax:	
Attn:	MICKEY BARTLETT	Phone:	
Subject:	PCO 40 SANITARY FORCEMAIN	Date:	July 13, 2022
From:	CHRIS STRATTON	Quote #:	11061

Terms	F.O.B.	Freight	Ship Via	Validity
Net 30	Factory	SEE BELOW	Best Way	30 Days

LINE #	Quantity	Size	Description	Unit Price	Total	Lead Time
01	2	20"	C153 MJ 45 BEND (401 LINED, BC)	3,277.39	6,554.78	12-16 WEEKS
02	4	20"	MEGALUG W/ ACCY SET FOR DIP	436.86	1,747.44	12-16 WEEKS
03						
04						
05						
06						
07						
08						
09						
10						
11						
12						
13						
14						
15						
16						
17						
18						
19						
20						
21						
22						
23						
24						
25						
26						
27						
28						
29						
30						
31						
32						
				Sub-Total:	8,302.22	
				Freight:	350.00	
				TOTAL:	8,652.22	

Sales Tax NOT Included

All Material Subject to Prior Sale
McDade Waterworks, Inc. reserves the right to apply "Price in Effect" at time of delivery due to shortages and/or further tariff declarations by state or federal agencies. McDade Waterworks Inc. will not be responsible for industry price changes or shortages beyond our control as a result of changes to the current tariff law.

This quotation is for your acceptance in its entirety within 30 Days.
If quantities or descriptions should change, McDade Waterworks, Inc, reserves the right to submit a revised quotation.

Sincerely,
McDade Waterworks, Inc.

Christopher Stratton Jr.

CENTRAL FLORIDA UNDERGROUND, INC.

990 MILLER DRIVE • ALTAMONTE SPRINGS, FLORIDA 32701
TELEPHONE 407-260-9000 • FAX 407-260-1599

May 21, 2022

R.J Sullivan Corp.
Attn: Mr. Mickey Bartlett
2001 NW 22nd Street
Pompano Beach, FL. 33069

Revised

RE: Quotation for Bore & Jack
PROJECT: Palm Bay South Regional Water Reclamation Facility
LOCATION: Palm Bay, FL.

Dear Sir:
Based on the information provided by your firm Central Florida Underground, Inc. proposes the following :

Furnish and install 30" .375 coated OD casing by bore and jack utilizing a steering system to maintain proper elevation of casing in bore pits dewatered and excavated by others.

2- Locations Approximately	116 L.F @	445.00	$51,620.00
TOTAL AMOUNT PROPOSED			**$51,620.00**
Add if Bond Required			$1,150.00

Notes:

a. All permits to be by others - including any inspection fees
b. Final payment is based on the actual quantity installed
c. All utilities to be located and verified by others
d. All boring equipment and casing to be placed in pits by others
e. All M.O.T required to be provided by others, including any barrier wall if required
f. Carrier pipe and installation to be by others

Bryan Ward
President

CENTRAL FLORIDA UNDERGROUND, INC.

990 MILLER DRIVE • ALTAMONTE SPRINGS, FLORIDA 32701
TELEPHONE 407-260-9000 • FAX 407-260-1599

July 29, 2020

R.J Sullivan Corp.
Attn: Mr. Mickey Bartlett
2001 NW 22nd Street
Pompano Beach, FL. 33069

RE: Quotation for Bore & Jack
PROJECT: Palm Bay South Regional Water Reclamation Facility
LOCATION: Palm Bay, FL.

Dear Sir:
Based on the information provided by your firm Central Florida Underground, Inc. proposes the following :

Furnish and install 30" .375 coated OD casing by bore and jack utilizing a steering system to maintain proper elevation of casing in bore pits dewatered and excavated by others.

2- Locations Approximately	116 L.F @	410.00	$47,560.00
TOTAL AMOUNT PROPOSED			**$47,560.00**
Add if Bond Required			$1,000.00

Notes:

a. All permits to be by others - including any inspection fees
b. Final payment is based on the actual quantity installed
c. All utilities to be located and verified by others
d. All boring equipment and casing to be placed in pits by others
e. All M.O.T required to be provided by others, including any barrier wall if required
f. Carrier pipe and installation to be by others

Bryan Ward
President

STATE CERTIFIED UTILITY CONTRACTOR CUCO 33893

South Regional Water Reclamation Facility
PCO #041 - Grit Equipment and Grit Channel Modifications

Labor & Materials			
Superintendent	4 MH @ $140/MH	$	560.00
Foreman	8 MH @ $100/MH	$	800.00
Laborer	24 MH @ $75/MH	$	1,800.00
Hydro International Scope Changes		$	76,145.00
Additional Wall Ties (change 18" she-bolt inserts to 24")		$	1,000.00
Concrete (Maschmeyer: $11,560 + $7,559)		$	19,119.00
	Subtotal:	**$**	**99,424.00**
	5% Contractor's Fee: (Agreement, Article 14.4.1.1)	**$**	**4,971.20**
	Contractor Total:	**$**	**104,395.20**
Field Services			
None		$	-
	Subtotal:	**$**	**-**
	5% Contractor's Fee: (Agreement, Article 14.4.1.1)	**$**	**-**
	Subcontractor Total:	**$**	**-**
Supplemental			
Equipment		$	-
Tax on Materials (7.0%)		$	6,078.38
Additional Bond & Insurance		$	900.81
	Subtotal:	**$**	**6,979.19**
	0% Contractor's Fee: (Agreement, Article 14.4.1.2)	**$**	**-**
	Other Total:	**$**	**6,979.19**
Credits			
Concrete (Maschmeyer: $4,896 + $4,534)		$	(9,430.00)
	Subtotal:	**$**	**(9,430.00)**
	5% Contractor's Fee: (Agreement, Article 14.4.1.3 & 14.4.1.4)	**$**	**(471.50)**
	Credits Total:	**$**	**(9,901.50)**

PCO #041 Total: $ 101,472.89

NOTE: Reinforcing steel has not changed according to drawings provided by Wade Trim. We will be placing the original reinforcing steel in the original locations shown on the contract drawings and the additional concrete will be placed beyond the original lines shown with no additional reinforcement provided.

July 19, 2022

R.J. Sullivan Corporation
2001 N.W. 22nd Street
Pompano Beach, FL 33069
Attn: Mr. Mickey Bartlett

Re: Palm Bay SRWRF
Purchase Order No. 390-02 – Grit Removal System

Dear Mr. Bartlett,

Hydro International (Hydro) bid the above reference project in September 2020 and received your purchase order in December 2020. Our pricing was based on a projected shipment timing of July 2021 which is outlined in our bid scope (attached). Since receiving your purchase order, Hydro has worked with you via Cameron Young of Moss Kelly, Inc., and Wade Trim to review the grit system design criteria. We provided a price reduction to remove the grit pumps and associated controls from our scope of supply in June 2021 ($40,934). At this time, we have not received a change order confirming the scope change.

Despite not having a formal change order, Hydro issued a revised submittal in February 2022 and received Wade Trim's response to our re-submittal dated April 11, 2022. One of the comments made by Wade Trim states that the peak flow rate has been changed from 9 MGD to 7.5 MGD. This change results in a reduction in the number of trays required in the HeadCell® unit from eight trays to six trays. Typically, this change would lead to a deduct but unfortunately, our costs for the entire system have significantly increased since December 2020.

Following a conference call with Wade Trim, Hydro issued a revised submittal package on May 9, 2022. We received final approval and release to fabrication on July 8, 2022. We have now reconciled all the impacts of the revised scope and current market conditions. While the number of trays in the HeadCell has been reduced, the final design includes extending the influent duct height to allow for a raised influent channel invert. This change increases the quantity of stainless steel which increases our cost to manufacture. Below is a summary of the contract costs:

$401,450	Original Contract (12/17/2020)	PCO #027
$40,934	Credit for Gravity Flow (6/1/2021)	
$360,516	Revised Scope/Price	
$76,145	Scope Changes/Cost increase to 2022 delivery	PCO #041
$4,569	6% State Sales Tax	
$80,714	Total Increase (not including county tax) – Change Order Value	
$360,516	Revised Scope/Price	
$80,714	Change Order Value	
$441,230	New Contract Value – not including county tax	

Based on the current scope and market conditions, Hydro is formally requesting a change order to address the removal of the grit pumps and controls, cover cost increases due to scope changes as well as the delayed release to fabrication. We appreciate your consideration in this matter and look forward to your feedback.

Sincerely,

Pat Herrick
Sales Director – Americas Wastewater

Cc: Mr. Cameron Young, Moss Kelly, Inc.

©2022 Hydro International

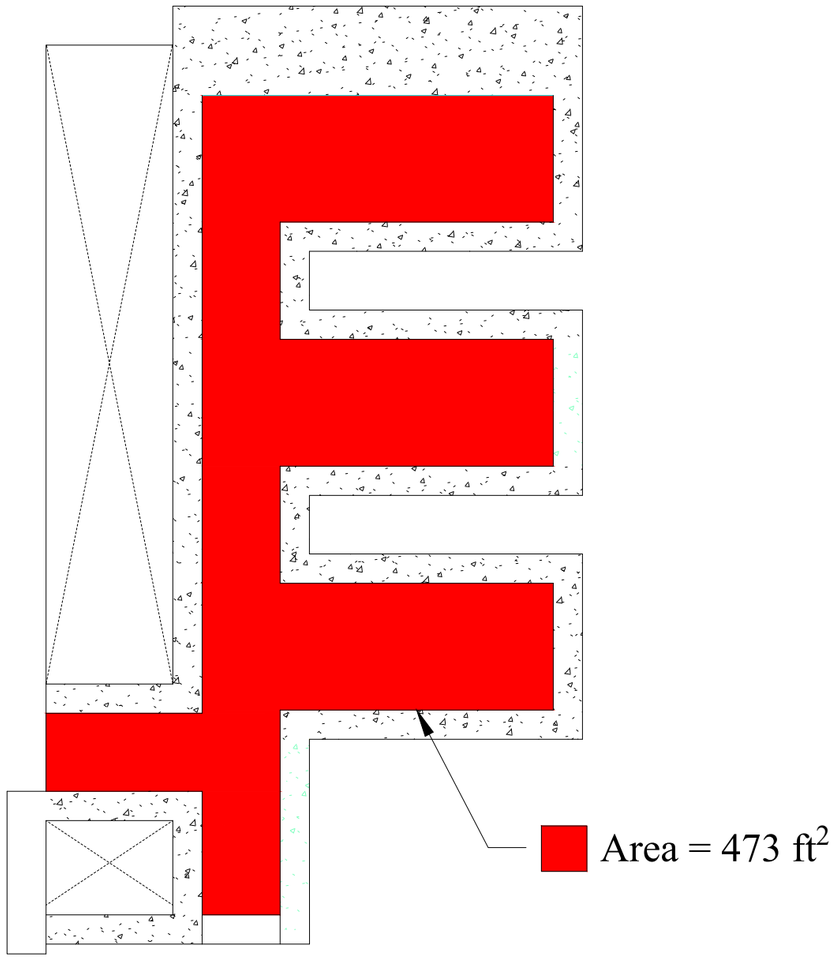

Additional Channel Slab Concrete (Elev. 37.00 - 38.00)

473 ft^2 x 1 ft x 1 yd^3/27 ft^3

= 18 yd^3

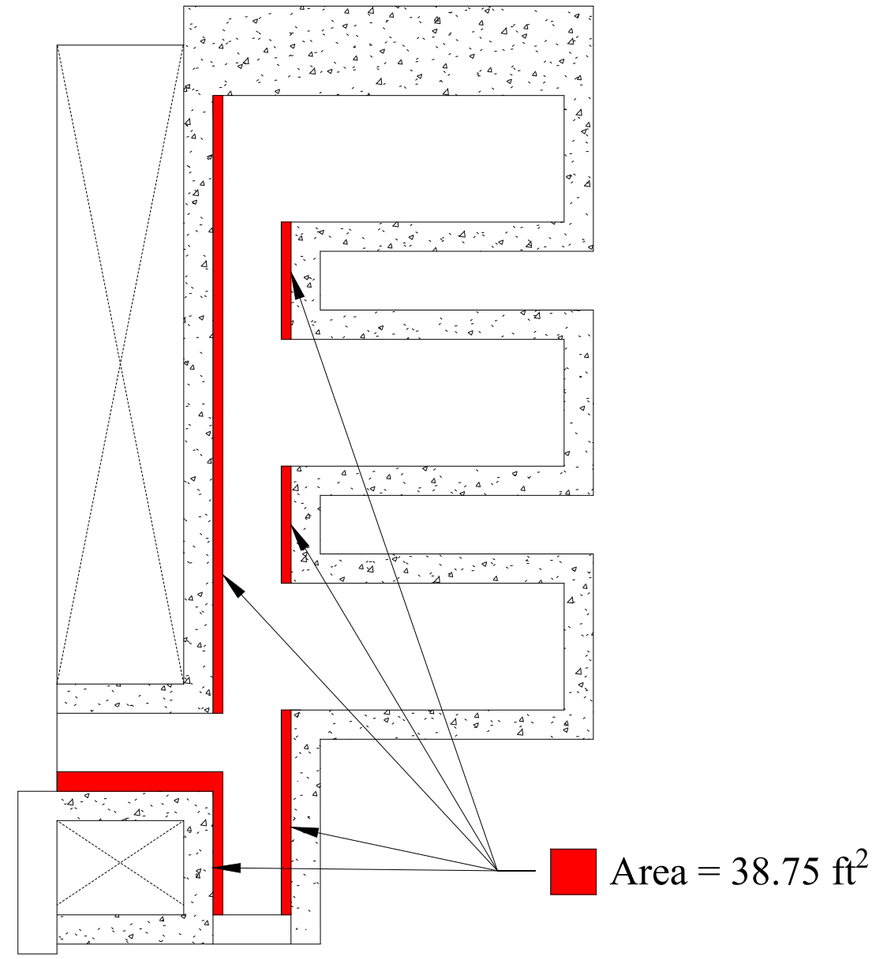

Additional Wall Concrete (Elev. 38.00 - 41.50)

38.75 ft^2 x 3.5 ft x 1 yd^3/27 ft^3

= 6 yd^3

General Notes

©2022 RJ Sullivan Corp. All rights reserved. These plans are the property of RJ Sullivan Corp. and may not be copied, manipulated, reverse engineered or used for construction without express written permission from RJ Sullivan Corp. Violators will be prosecuted to the fullest extent of the law.

No.	Revision/Issue	Date

rj Sullivan Corp.
GENERAL CONTRACTOR
2001 N.W. 22nd Street • Pompano Beach, FL 33069
Phone 954-975-0388 • Fax 954-975-3333

Designed: JEB
Drawn: JEB
Checked:
Approved:

Project Name
City of Palm Bay
South Regional Water
Reclamation Facility

PCO #041
Grit Equipment and Grit
Channel Modifications

Project: 390
Date: 8/16/2022
Scale: NTS
Drawing:
Sheet: 1 of 1

CURRENT

2401 Dinneen Ave Orlando, FL 32804 Dispatch 407-339-5311 Fax 407-339-0657

Date: Aug 16, 2022

Quote #: MQ0018586_

Customer Name: R.J. SULLIVAN CORP
Contact: Mickey Bartlett
Contact Tele #: -

Contact Cell #:-
Contact Email:-
Contact Fax #:-

Project: City of Palm Bay- South Regional- WRF
Project Address: 2803 Palm Bay Road Northeast
Project City/ST/Zip: Palm Bay, FL 32905

Mix Code	Product Description	Note	UOM	Unit Price (1)
30090000	30090000 - 3000 REGULAR		Cubic Yards	$125.00
50090000	50090000 - 5000 PSI REGULAR		Cubic Yards	$133.00
50090000	50090000 - 5000 PSI REGULAR **HRWR**		Cubic Yards	$139.00
50550000	50550000 - 5000 PRPM		Cubic Yards	$141.00
50550451	50550451 - 5000 PRPM 0.45 wcm HRWR		Cubic Yards	$147.00

(1) The above prices are for seven (7) cubic yards or more on any one pour, additional delivery charges apply for deliveries made under six and one half (6.5) cubic yards.
Quote will expire six (6) months after last escalation date.

Fees & Surcharges	Payload Load Fees: (please note no deliveries under 1 cubic yard)	
1 to 2.5 cubic yards	300.00	Per Load
3 to 4.5 cubic yards	250.00	Per Load
5 to 6.5 cubic yards	200.00	Per Load
ADD FOR EXTENED SET TIME (PER ADDITIONAL HOUR)	5.00	Per Cubic Yard
Environmental Charge	30.00	Per Load
Fuel Surcharge	50.00	Per Load
Off hour deliveries not including Sunday, & Holidays (4 Hour minimum)	500.00	Per Hour
Saturday Delivery	10.00	Per Cubic Yard
Split Loads (within 1 mile max)	75.00	each
Waiting Time	1.50	per Minute

We propose to furnish the above stated mix designs that will meet the stated strength when test specimins are manufactured and tested in accordance with current ASTM standards and evaluated per ACI recommended standards and practices.
Maschmeyer Concrete requests copies of all approved Mix Designs prior to job site deliver. In order to comply with ACI 318-99 Paragraph 5.3, we request that Maschmeyer Concrete be included on the distribution list for all Concrete Test Reports.
It is recommended that a pre-pour conference be held at the jobsite prior to site delivery. The purpose of the meeting would be to answer any questions regarding responsibilites in scheduling and jobsite operations. All Pearock Pump mixes and Grout mixes are not designed to be used as a Masonry Grout or for use in any type of slab or similar structure which may be subject to drying shrinkage limits.

Additional Information

Begin Date:

Escalation Date: Oct 01, 2022 — Escalation Amount: $8.00
Escalation Date 2: Jan 01, 2023 — Escalation Amount: $14.00
Escalation Date 3: Jul 01, 2023 — Escalation Amount: $8.00
Escalation Date 4: — Escalation Amount: $

Expiration Date: Sep 30, 2022

Maschmeyer Representative

By: Erik Lunde

Cell#: 4079193152

Email: ELunde@maschmeyer.com

Date: _____

Customer Representative

By:_____

Date:_____

This quotation is offered for acceptance within 30 days, after which it is subject to confirmation by the seller. This quotation shall become a contract of sale when accepted by the buyer and approved by the seller's credit department.

Base Price ($/CY):	$	155.00
Admixture 1 ($/CY):		
Admixture 2 ($/CY):		
Temperature Control ($/CY):		
Environmental Surcharge ($/LD):	$	30.00
Fuel Surcharge ($/LD):	$	50.00
Short Load Charge 1:	$	200.00
Short Load Charge 2:	$	250.00
Short Load Charge 3:	$	300.00
Short Load Cutoff 1:		≤ 6.5 CY
Short Load Cutoff 2:		≤ 4.5 CY
Short Load Cutoff 3:		≤ 2.5 CY

Total Concrete: 56.0 CY
Total Price: $ 11,560

5000 Regular

Headworks Influent Channel Slab		
Base Price ($/CY)	$	155.00
CY		56
Loads		6
Admixture 1 ($/CY)	$	-
Admixture 2 ($/CY)	$	-
Temperature Control ($/CY)	$	-
Environmental Surchage ($/LD)	$	180.00
Fuel Surchage ($/LD)	$	300.00
Short Load Charge ($/LD)	$	-
Total Cost	$	11,560.00
Price per CY	$	206.43

Base Price ($/CY):	$	161.00
Admixture 1 ($/CY):		
Admixture 2 ($/CY):		
Temperature Control ($/CY):		
Environmental Surcharge ($/LD):	$	30.00
Fuel Surcharge ($/LD):	$	50.00
Short Load Charge 1:	$	200.00
Short Load Charge 2:	$	250.00
Short Load Charge 3:	$	300.00
Short Load Cutoff 1:		≤ 6.5 CY
Short Load Cutoff 2:		≤ 4.5 CY
Short Load Cutoff 3:		≤ 2.5 CY

Total Concrete: 39.0 CY
Total Price: $ 7,559

5000 Regular w/ HRWR

Headworks Influent Channel Walls		
Base Price ($/CY)	$	161.00
CY		39
Loads		4
Admixture 1 ($/CY)	$	-
Admixture 2 ($/CY)	$	-
Temperature Control ($/CY)	$	-
Environmental Surchage ($/LD)	$	120.00
Fuel Surchage ($/LD)	$	200.00
Short Load Charge ($/LD)	$	-
Total Cost	$	7,559.00
Price per CY	$	193.82

AS BID

MASCHMEYER

2401 Dinneen Ave Orlando, FL 32804 Dispatch 407-339-5311 Fax 407-339-0657

Date: Aug 26, 2020
Quote #: MQ0012406_

Customer Name: R.J. SULLIVAN CORP
Contact: Carolyn Sullivan
Contact Tele #: Not on File

Contact Cell #:
Contact Email:
Contact Fax #:

Project: Palm Bay-South Regional Water Reclamation Facility
Project Address: 2401 Dinneen Avenue
Project City/ST/Zip: Orlando, FL 32804

Mix Code	Product Description	Note	UOM	Unit Price (1)
30090000	30090000 - 3000 REGULAR		Cubic Yards	$98.00
50090000	50090000 - 5000 PSI REGULAR		Cubic Yards	$106.00
50090000	50090000 - 5000 PSI REGULAR **HRWR**		Cubic Yards	$112.00
50550000	50550000 - 5000 PRPM		Cubic Yards	$114.00
50550000	50550000 - 5000 PRPM **HRWR**		Cubic Yards	$120.00

(1) The above prices are for seven (7) cubic yards or more on any one pour, additional delivery charges apply for deliveries made under six and one half (6.5) cubic yards.
Quote will expire six (6) months after last escalation date.

Fees & Surcharges	Payload Load Fees: (please note no deliveries under 1 cubic yard)	
1 to 2.5 cubic yards	250.00	Per Load
3 to 4.5 cubic yards	200.00	Per Load
5 to 6.5 cubic yards	150.00	Per Load
Environmental Charge	20.00	Per Load
Fuel Surcharge	20.00	Per Load
Off hour deliveries not including Sunday, & Holidays (4 Hour minimum)	500.00	Per Hour
Saturday Delivery	7.50	Per Cubic Yard
Split Loads (within 1 mile max)	75.00	each
Waiting Time	1.50	per Minute

We propose to furnish the above stated mix designs that will meet the stated strength when test specimins are manufactured and tested in accordance with current ASTM standards and evaluated per ACI recommended standards and practices.
Maschmeyer Concrete requests copies of all approved Mix Designs prior to job site deliver. In order to comply with ACI 318-99 Paragraph 5.3, we request that Maschmeyer Concrete be included on the distribution list for all Concrete Test Reports.
It is recommended that a pre-pour conference be held at the jobsite prior to site delivery. The purpose of the meeting would be to answer any questions regarding responsibilites in scheduling and jobsite operations. All Pearock Pump mixes and Grout mixes are not designed to be used as a Masonry Grout or for use in any type of slab or similar structure which may be subject to drying shrinkage limits.

DRAFT

Additional Information

Begin Date: Aug 21, 2020
Escalation Date: Jan 01, 2021
Escalation Amount: $6
Escalation Date 2:
Escalation Amount: $
Escalation Date 3:
Escalation Amount: $
Escalation Date 4:
Escalation Amount: $
Expiration Date: Dec 31, 2020

Maschmeyer Representative

By: Nolan Jahna
Cell#: null
Email: NJahna@maschmeyer.com
Date: _____

Customer Representative

By:_____
Date:_____

This quotation is offered for acceptance within 30 days, after which it is subject to confirmation by the seller. This quotation shall become a contract of sale when accepted by the buyer and approved by the seller's credit department.

Base Price ($/CY):	$	112.00
Admixture 1 ($/CY):		
Admixture 2 ($/CY):		
Temperature Control ($/CY):		
Environmental Surcharge ($/LD):	$	20.00
Fuel Surcharge ($/LD):	$	20.00
Short Load Charge 1:	$	150.00
Short Load Charge 2:	$	200.00
Short Load Charge 3:	$	250.00
Short Load Cutoff 1:		≤ 6.5 CY
Short Load Cutoff 2:		≤ 4.5 CY
Short Load Cutoff 3:		≤ 2.5 CY

Total Concrete: 38.0 CY
Total Price: $ 4,896

5000 Regular

Headworks Influent Channel Slab		
Base Price ($/CY)	$	112.00
CY		38
Loads		4
Admixture 1 ($/CY)	$	-
Admixture 2 ($/CY)	$	-
Temperature Control ($/CY)	$	-
Environmental Surchage ($/LD)	$	80.00
Fuel Surchage ($/LD)	$	80.00
Short Load Charge ($/LD)	$	-
Total Cost	$	4,896.00
Price per CY	$	128.84

Base Price ($/CY):	$	118.00
Admixture 1 ($/CY):		
Admixture 2 ($/CY):		
Temperature Control ($/CY):		
Environmental Surcharge ($/LD):	$	20.00
Fuel Surcharge ($/LD):	$	20.00
Short Load Charge 1:	$	150.00
Short Load Charge 2:	$	200.00
Short Load Charge 3:	$	250.00
Short Load Cutoff 1:		≤ 6.5 CY
Short Load Cutoff 2:		≤ 4.5 CY
Short Load Cutoff 3:		≤ 2.5 CY

Total Concrete: 33.0 CY
Total Price: $ 4,534

5000 Regular w/ HRWR

Headworks Influent Channel Walls		
Base Price ($/CY)	$	118.00
CY		33
Loads		4
Admixture 1 ($/CY)	$	-
Admixture 2 ($/CY)	$	-
Temperature Control ($/CY)	$	-
Environmental Surchage ($/LD)	$	80.00
Fuel Surchage ($/LD)	$	80.00
Short Load Charge ($/LD)	$	-
Total Cost	$	4,534.00
Price per CY	$	137.39

South Regional Water Reclamation Facility
PCO #042 - CIP System Modifications

Labor & Materials

Superintendent	200 MH @ $140/MH	$	28,000.00
Foreman	200 MH @ $100/MH	$	20,000.00
Laborer	400 MH @ $75/MH	$	30,000.00
Materials (See Attached List)		$	13,401.42
	Subtotal:	**$**	**91,401.42**
	5% Contractor's Fee: (Agreement, Article 14.4.1.1)	**$**	**4,570.07**
	Contractor Total:	**$**	**95,971.49**

Field Services

Surveyor	$	2,000.00
Core drill wall for CIP Piping	$	300.00
Testing Lab (Densities - 7 sets @ $200/set)	$	1,400.00
Subtotal:	**$**	**3,700.00**
5% Contractor's Fee: (Agreement, Article 14.4.1.1)	**$**	**185.00**
Subcontractor Total:	**$**	**3,885.00**

Supplemental

Equipment		
Excavator - 4 weeks @ $2,500/week	$	10,000.00
Front End Loader - 4 weeks @ $1,500/week	$	6,000.00
Combination Backhoe/Loader - 2 weeks @ $1,250/week	$	2,500.00
Plate Compactor - 2 weeks @ $500/week	$	1,000.00
Manlift - 1 week @ $1,000/week	$	1,000.00
Dewatering Equipment - 1 week @ $1,500/week	$	1,500.00
Tax on Materials (7.0%)	$	674.57
Additional Bond & Insurance	$	71,006.26
Subtotal:	**$**	**93,680.83**
0% Contractor's Fee: (Agreement, Article 14.4.1.2)	**$**	**-**
Other Total:	**$**	**93,680.83**

Credits

Material Credit (See Attached List)	$	(3,764.70)
Subtotal:	**$**	**(3,764.70)**
5% Contractor's Fee: (Agreement, Article 14.4.1.3 & 14.4.1.4)	**$**	**(188.24)**
Credits Total:	**$**	**(3,952.94)**

PCO #042 Total:	**$**	**189,584.38**
Additional Contract Time Required: 287 days		

Additional Materials

Supplier	Quantity	Item	Unit	Total
Harrington	1	PVC Pipe & Fittings	$ 3,173.78	$ 3,173.78
McDade Waterworks	1	Pipe, Fittings, Supports, and Accessories	$ 3,498.80	$ 3,498.80
Maschmeyer	6	Concrete, CY	$ 229.000	$ 1,374.00
R.J. Sullivan Corp.	614	Diesel Fuel, Gallons	$ 4.717	$ 2,896.24
R.J. Sullivan Corp.	1	Slab Forms, Chamfer Strip, 1/2" Expansion Joint, Bricks, Tie Wire, Curing, Grout Pipe in Wall	$ 600.00	$ 600.00
R.J. Sullivan Corp.	1	Strut, Clamps, Neoprene, & Supports for CIP System	$ 1,200.00	$ 1,200.00
White Cap	890	Rebar, LB	$ 0.74	$ 658.60
			Total:	**$ 13,401.42**

Harrington Industrial Plastics LLC

Harrington Industrial Plastics
5251 Powerline Road
Fort Lauderdale FL 33309

Phone: **954-351-0088** **Fax:** **954-351-0300**

Attention: JASON BUCKWALTER

Company: R J SULLIVAN CORPORATION

To: KABERCROMBIE@HIPCO.COM

From: Kevin A. Abercrombie

Subject: QUOTE 04443235

Memo:

Harrington Industrial Plastics
5251 Powerline Road
Fort Lauderdale FL 33309
954-351-0088
954-351-0300 Fax

Quotation#: 04443235
Written: KAA
Quote Date: 04/12/23
Expire Date: 04/26/23
Page: 1 OF 2

Quotation

053716
R J SULLIVAN CORPORATION

2001 NORTHWEST 22 STREET
POMPANO BEACH, FL 33069

Ship To:
R J SULLIVAN CORPORATION

2001 NORTHWEST 22 STREET
POMPANO BEACH, FL 33069

Job:

RFQ#

Contact: JASON BUCKWALTER
Phone#: 954-975-0388
Fax: 954-975-3333

Ship Via: BEST WAY POSSIBLE
FOB / Delivery ARO: SHIPPING POINT
Frt-Terms: PREPAID & CHARGE

Product/Description	Quantity	Price	U/M	Extension
*1099 FITTINGS MISC 35-3810404 - 4" ADAPTER SEWER x DWV GASKET x SOCKET	2	42.10	EA	84.20
PVC-00706X-1200 4" P-TRAP S PVC DWV ALT-P706X-040CH	2	51.63	EA	103.26
[redacted]				
800-030 3" PIPE P/E PVC SCH80	380	5.55	FT	2,109.00
[redacted]				
806-030S 3" 90 ELBOW S PVC SCH80	12	9.72	EA	116.64
829-030S 3" COUPLING S PVC SCH80	11	13.00	EA	143.00
[redacted]				

Continued

Harrington Industrial Plastics
5251 Powerline Road
Fort Lauderdale FL 33309
954-351-0088
954-351-0300 Fax

Quotation# 04443235
Written: KAA
Quote Date 04/12/23
Expire Date 04/26/23
Page 2 OF 2

Product/Description	Quantity	Price	U/M	Extension
[redacted]				
836-030S 3" ADAPTER MPTxS PVC SCH80	3	12.81	EA	38.43
[redacted]				
897-030S 3" UNION S PVC EPDM SCH80	1	31.25	EA	31.25
*1099 FITTINGS MISC 35-2204 - 4" 45 ELBOW PVC SDR-35 GxG	1	21.40	EA	21.40
*1099 FITTINGS MISC 35-010404 - 4" WYE GxGxG PVC SDR-35	1	36.91	EA	36.91
*1099 FITTINGS MISC 35-011004 - 10"x4" WYE REDUCER PVC SDR-35 GxGxG	1	339.69	EA	339.69
SHIPPING CHARGES APPLY ON SDR35 FITTINGS; FOB VIRGINIA	1	150.00	EA	150.00

Subtotal for PCO #042 = $3,173.78

Merchandise	Tax	Est.Freight / Handling	Net Quote Total
3,167.42	221.70	150.00	3,539.12

Thanks For Thinking Harrington.
Respectfully Kevin A. Abercrombie
All Quotations are subject to review upon placement of order.
Freight/Handling and applicable taxes if not listed above will be added.
Harrington standard terms and conditions apply to this quote.

McDade Waterworks, Inc.
Post Office Box 16039 - Tampa, FL 33687-6039
(813) 740-1144 - FAX (813) 627-9387

December 28, 2023

Serving the Water & Wastewater Plant Industry for over 30 Years, Please visit us at:

R.J. Sullivan Corp.
Attn: Jason Buckwalter

See

Project Name: Palm Bay SRWRF PCO #043 - CIP System Mods
McDade Project #: P20-232
Bid Date: N/A
Addendum: N/A
ARRA, AIS, or Domestic Requirement - Yes

BID ITEM	QTY	SIZE	DESCRIPTION	WEIGHT EACH	UNIT $	EXT $
	2	04"	FLOOR DRAIN, JOSAM 30000-A COATED CAST IRON FLOOR DRAIN W/ NICKEL BRONZE ROUND TRACTOR STRAINER AND TRAP PRIMER CONNECTION		$315.61	$631.22
	56	04"	SDR-35 PVC SEWER PIPE		$3.09	$173.04
	1	04"	C153 MJ PLUG W/ 3" TAP (C/L, BC) DOMESTIC		$566.12	$566.12
	1	10"	C153 MJ LP SLEEVE (C/L, BC) DOMESTIC	61	$278.43	$278.43
	2	10"	MEGALUG W/ ACCY SET FOR DIP	32	$114.04	$228.08
	1	04"	C153 MJ BOLT & GASKET SET	4	$26.81	$26.81
	2	10"	SBR IPS TO MJ TRANSITION GASKET		$21.23	$42.46
	8	03"	STAINLESS STEEL WALL PIPE SUPPORT FOR 3" PIPE WITH 5/8" BOLTS & NUTS, 10" C/L (DETAIL - WALL PIPE SUPPORT/P-29)		$131.58	$1,052.64
	1	LUMP SUM	FREIGHT TO JOB SITE		$500.00	$500.00

ESTIMATED LEAD TIME ON MATERIALS:

1 DUCTLE IRON RUN PIPE: 30-36 WKS
2 DUCTILE IRON MJ & FLANGE FITTINGS: STOCK - 20 WKS
3 DUCTILE IRON FABRICATED PIPE: 8-12 WKS
4 MJ RESTRAINTS: STOCK - 16 WKS
5 GATE VALVE: 16-24 WKS

TOTAL THIS BID ITEM - TAX NOT INCLUDED		$3,498.80
DUCTILE TOTAL ALL BID ITEM - TAX NOT INCLUDED	61.00	$844.55
RESTRAINT TOTAL ALL BID ITEM - TAX NOT INCLUDED	36.00	$297.35
C-900 AND SDR-26 / 35 PVC TOTAL ALL BID ITEM - TAX NOT INCLUDED		$173.04
SUPPORT TOTAL ALL BID ITEM - TAX NOT INCLUDED		$1,052.64
MISC TOTAL ALL BID ITEM - TAX NOT INCLUDED		$1,131.22
GRAND TOTAL ALL BID ITEM - TAX NOT INCLUDED		$3,498.80

Notes:

1 All Ductile Iron MJ Fitting Quoted C153 (Compact)
2 All Fitting and Valves Quoted Less Accessories
3 All Buried Ductile Iron Pipe and MJ Fitting Quoted Bituminous Coated
4 All Flange Pipe and Fitting Quoted Prime Coated
5 All Ductile Iron Pipe and Fitting Quoted Cement Lined
6 All Ductile Iron Fitting (MJ & Flange) Quoted Are Domestically Sourced
7 Escalation - Buried Pipe only (PO & RJ)
Buried pipe firm if released in full no later 05-15-2023. Pipe released after 05-15-2023 will be re-quoted (negotiated).

Escalation - Fab and Fittings
If signed purchase order agreement is acceptable to both parties within 30 days of quotation, Ductile Iron Pipe, Fittir
and Fabrication prices will be held firm thru 09-30-2023.

BID ITEM	QTY	SIZE	DESCRIPTION	WEIGHT EACH	UNIT $	EXT $
			From 10-01-2023 - 03-31-2024 a 5% unit price increase will be in effect for all releases to jobsite.			
			From 04-01-2024 - 09-30-2024 a 5% additional unit price increase will be in effect for all releases to jobsite.			
			All releases to jobsite after 10-01-2024 will be based on new quoted prices at that time.			
	8		**At this time US Pipe and American are not producing fittings 24" and smaller.**			
			Fittings are only made by Fitting Manufactures and brands are blended when we			
			ship projects based on availability at time of order.			
	9		**Due to the volatile raw market All C-900 PVC, C-905 PVC, HDPE, SDR 35, Sch 80 PVC,**			
			Sch 40 PVC, Stainless Steel, Copper & Brass Pipe, Fittings, Valves, etc.			
			will/may need to be re-quoted at the time of purchase. Pricing Subject to Availability.			
			***** PVC prices are good till 05-02-2023.**			
			McDade Waterworks, Inc. reserves the right to apply "Price in Effect" at time of delivery due to			
			shortages and/or further "Force Majeure" declarations by manufacturer(s). McDade			
			Waterworks, Inc will not be responsible for industry price changes or shortages beyond our control.			
	11		**All valve boxes quoted less extension stem unless noted otherwise.**			
	12		**Flange Accessories Set Prices are Firm for 14 Days from Bid Date, &**			
			Must Ship Within 28 Working Days from Bid Date.			
	13		**Pipe Supports - Do not include engineering calculations (ie. wind, seismic, etc.). We can**			
			recommend someone who can provide this information if requested.			
	14		**Line drawings are not included. If needed add $1,000.00 per sheet.**			
	15		**No Spare Parts for any components on take-off are included, unless noted otherwise.**			
	16		**Kennedy Valve warranty for project is (1) year from date of shipment. Extended warranty can be purchased**			
			for a additional 1% of the purchase price for each additional year warranty up to 3 year maximum from			
			date of shipment.			

***** DISCLAIMER:***
McDade Waterworks, Inc. reserves the right to increase prices and/or change escalation terms at any time based on the potential of continued cost volatility.

Confidentiality. Both McDade and Customer agree that the terms of this quotation, including the attached pricing are confidential and shall be held in strict confidence by both parties and may not be disclosed unless required by law. Customer agrees not to post or publicly display the terms or the pricing. Customer also agrees that any discussions or negotiations regarding the attached pricing or any changes thereto (including but not limited to future pricing offerings) are also confidential and are pursuant to this provision of confidentiality.

The above quotation is **our** interpretation of the plans and specifications and should be reviewed by **your** firm for accuracy. Prices do not include valve boxes, ext. stems, wrenches, start-up services, etc. unless specifically noted in our quotation. Prices are based on full freight allowed truckload shipments to the project. Additional materials ordered will be furnished on a case by case basis.

Terms: Net 30 Days
FOB: S/P - FFA to Jobsite (Based on Terms Above)

Please call should you have any questions or need any additional pricing.

Sincerely,

Christian Fracchia

Base Price ($/CY):	$	184.00
Admixture 1 ($/CY):		
Admixture 2 ($/CY):		
Temperature Control ($/CY):		
Environmental Surcharge ($/LD):	$	30.00
Fuel Surcharge ($/LD):	$	40.00
Short Load Charge 1:	$	200.00
Short Load Charge 2:	$	250.00
Short Load Charge 3:	$	300.00
Short Load Cutoff 1:		≤ 6.5 CY
Short Load Cutoff 2:		≤ 4.5 CY
Short Load Cutoff 3:		≤ 2.5 CY

Total Concrete: 6.0 CY
Total Price: $ 1,374

5000 Regular

CIP System Slab		
Base Price ($/CY)	$	184.00
CY		6
Loads		1
Admixture 1 ($/CY)	$	-
Admixture 2 ($/CY)	$	-
Temperature Control ($/CY)	$	-
Environmental Surchage ($/LD)	$	30.00
Fuel Surchage ($/LD)	$	40.00
Short Load Charge ($/LD)	$	200.00
Total Cost	$	1,374.00
Price per CY	$	229.00

Total Weight: 890 LB = 0.445 TONS

CIP System Slab

Quantity	Bar Size	Length	LB/FT	Total LB
27	5	11	1.043	310
19	5	15	1.043	297
		Subtotal:	**607 LB**	

CIP System Slab Thickened Edge

Quantity	Bar Size	Length	LB/FT	Total LB
2	7	8.66666667	2.044	35
2	7	12.6666667	2.044	52
2	7	8	2.044	33
2	7	12	2.044	49
8	7	7	2.044	114
		Subtotal:	**283 LB**	

Material Credit

Supplier	Quantity	Item	Unit	Total
McDade Waterworks	-2	4" Fire Hydrant	$ 1,882.35	$ (3,764.70)
			Total:	**$ (3,764.70)**

McDade Waterworks, Inc.

Post Office Box 16039 - Tampa, FL 33687-6039
(813) 740-1144 - FAX (813) 627-9387

January 4, 2021

Serving the Water & Wastewater Plant Industry for over 30 Years, Please visit us at:
www.mcdadewaterworks.com

R.J. Sullivan Corp
Attn: Jason Buckwalter

Project: Palm Bay South Regional Water Reclamation Facility
Bid Date: September 10, 2020 @ 5:00 PM
Addendum: 1-9
AIS Requirement - Yes

QTY	SIZE	DESCRIPTION	WEIGHT EACH	UNIT $	EXT $
2	06"	FIRE HYDRANT, RECLAIMED (02661-2.01H. & 2.02I.)		$1,882.35	$3,764.70
		TOTAL THIS BID ITEM - TAX NOT INCLUDED			**$3,764.70**
		DUCTILE TOTAL ALL BID ITEM - TAX NOT INCLUDED	**0.00**		**$0.00**
		RESTRAINT TOTAL ALL BID ITEM - TAX NOT INCLUDED	**0.00**		**$0.00**
		VALVE TOTAL ALL BID ITEM - TAX NOT INCLUDED			**$3,764.70**
		FAS TOTAL ALL BID ITEM - TAX NOT INCLUDED			**$0.00**
		EXPANSION JOINT TOTAL ALL BID ITEM - TAX NOT INCLUDED			**$0.00**
		COUPLING TOTAL ALL BID ITEM - TAX NOT INCLUDED			**$0.00**
		C-900 / 905 AND SDR-26 / 35 PVC TOTAL ALL BID ITEM - TAX NOT INCLUDED			**$0.00**
		STAINLESS TOTAL ALL BID ITEM - TAX NOT INCLUDED			**$0.00**
		SUPPORT TOTAL ALL BID ITEM - TAX NOT INCLUDED			**$0.00**
		MISC TOTAL ALL BID ITEM - TAX NOT INCLUDED			**$0.00**
		GRAND TOTAL ALL BID ITEM - TAX NOT INCLUDED			**$3,764.70**

Notes:

1. All Ductile Iron MJ Fitting Quoted C153 (Compact)
2. All Fitting and Valves Quoted Less Accessories
3. All Buried Ductile Iron Pipe and MJ Fitting Quoted Bituminous Coated
4. All Flange Pipe and Fitting Quoted Prime Coated
5. All Ductile Iron Pipe and Fitting Quoted Cement or Protecto 401 Lined as noted above
6. All Ductile Iron Fitting (MJ & Flange) Quoted Are Globally Sourced
7. All Ductile Iron Run Pipe prices are good for 1 year from Bid Date. After the one year period there will be a price increase of 3% and additional 3% for every 6 month after that. This escalation is from the pipe manufacturer and they have stated that it is not negotiable.
8. Due to the volatile raw market *All C-900 PVC, C-905 PVC, HDPE, SDR 35, Sch 80 PVC, Sch 40 PVC, Stainless Steel, Copper & Brass Pipe, Fittings, Valves, etc* will/may need to be re-quoted at the time of purchase. Pricing Subject to Availability.
   *** PVC prices are good till October 9, 2020
9. McDade Waterworks, Inc. reserves the right to apply "Price in Effect" at time of delivery due to shortages and/or further tariff declarations by state or federal agencies. McDade Waterworks, Inc will not be responsible for industry price changes or shortages beyond our control as a result of changes to current tariff law.
10. Due to the volitility of the raw PVC material market this quotation is valid until_____, at which time the order must be placed or this quotation is automatically voided . Prices are firm if order is released by_____for shipment completed by_____. Pricing and order acceptance is contingent upon the selected PVC manufacturer receiving collectively sufficient orders to meet minimum run requirements . All backorders will be shipped , "Price In Effect" at time of shipment, If for any reason pipe is delivered after the terms of this quotation .

QTY	SIZE	DESCRIPTION	WEIGHT EACH	UNIT $	EXT $

11. **All valve boxes quoted less extension stem unless noted otherwise.**
12. **Flange Accessories Set Prices are Firm for 14 Days from Bid Date, & Must Ship Within 28 Working Days from Bid Date.**
14. **Pipe Supports - Do not include engineering calculations (ie. wind, seismic, etc). We can recommend someone who can provide this information if requested.**
15. **Line drawings are not included. If needed add $1,000.00 per sheet.**
16. **No Spare Parts for any components on take-off are included, unless noted otherwise.**
17. **Electric Actuators are quoted Open/Close service, Unless stated otherwise.**
18. **Valve warranty for project is (2) years from date of shipment. Extended warranty can be purchased for a additional 1% of the purchase price for each additional year warranty up to 3 year maximum from date of shipment.**

***** DISCLAIMER:***
McDade Waterworks, Inc. reserves the right to increase prices and/or change escalation terms at any time based on the potential of continued cost volatility.

Confidentiality. Both McDade and Customer agree that the terms of this quotation, including the attached pricing are confidential and shall be held in strict confidence by both parties and may not be disclosed unless required by law. Customer agrees not to post or publicly display the terms or the pricing. Customer also agrees that any discussions or negotiations regarding the attached pricing or any changes thereto (including but not limited to future pricing offerings) are also confidential and are pursuant to this provision of confidentiality.

The above quotation is **our** interpretation of the plans and specifications and should be reviewed by **your** firm for accuracy. Prices do not include valve boxes, ext stems, wrenches, start-up services, etc. unless specifically noted in our quotation. Prices are based on full freight allowed truckload shipments to the project. Additional materials ordered will be furnished on a case by case basis.

Terms: Net 30 Days
FOB: S/P - FFA to Jobsite (Based on Terms Above)

Please call should you have any questions or need any additional pricing.

Sincerely,

Mike Worrell

South Regional Water Reclamation Facility
PCO #043 - Hose Station at PDLS

Labor & Materials

Superintendent	24 MH @ $140/MH	$	3,360.00
Foreman	24 MH @ $100/MH	$	2,400.00
Laborer	48 MH @ $75/MH	$	3,600.00
Materials (See Attached List)		$	3,907.44
	Subtotal:	**$**	**13,267.44**
	5% Contractor's Fee: (Agreement, Article 14.4.1.1)	**$**	**663.37**
	Contractor Total:	**$**	**13,930.81**

Field Services

Surveyor		$	500.00
Testing Lab (Densities - 3 sets @ $200/set)		$	600.00
	Subtotal:	**$**	**1,100.00**
	5% Contractor's Fee: (Agreement, Article 14.4.1.1)	**$**	**55.00**
	Subcontractor Total:	**$**	**1,155.00**

Supplemental

Equipment			
Combination Backhoe/Loader - 1 week @ $1,250/week		$	1,250.00
Plate Compactor - 1 day @ $250/day		$	250.00
Tax on Materials (7.0%)		$	273.52
Additional Bond & Insurance		$	60,684.15
	Subtotal:	**$**	**62,457.67**
	0% Contractor's Fee: (Agreement, Article 14.4.1.2)	**$**	**-**
	Other Total:	**$**	**62,457.67**

Credits

None		$	-
	Subtotal:	**$**	**-**
	5% Contractor's Fee: (Agreement, Article 14.4.1.3 & 14.4.1.4)	**$**	**-**
	Credits Total:	**$**	**-**

PCO #043 Total:	**$**	**77,543.48**
Additional Contract Time Required: 255 days		

Additional Materials

Supplier	Quantity	Item	Unit	Total
Harrington	1	PVC Pipe & Fittings	$ 64.75	$ 64.75
McDade Waterworks	1	Pipe, Fittings, Supports, and Accessories	$ 3,515.33	$ 3,515.33
R.J. Sullivan Corp.	27	Diesel Fuel, Gallons	$ 4.717	$ 127.36
R.J. Sullivan Corp.	1	Anchors, Bolts, Nuts, Washers, Signage	$ 200.00	$ 200.00
			Total:	**$ 3,907.44**

Harrington Industrial Plastics LLC

Harrington Industrial Plastics
5251 Powerline Road
Fort Lauderdale FL 33309

Phone: **954-351-0088** **Fax:** **954-351-0300**

Attention: JASON BUCKWALTER

Company: R J SULLIVAN CORPORATION

To: KABERCROMBIE@HIPCO.COM

From: Kevin A. Abercrombie

Subject: QUOTE 04443235

Memo:

Harrington Industrial Plastics
5251 Powerline Road
Fort Lauderdale FL 33309
954-351-0088
954-351-0300 Fax

Quotation#: 04443235
Written: KAA
Quote Date: 04/12/23
Expire Date: 04/26/23
Page: 1 OF 2

Quotation

053716
R J SULLIVAN CORPORATION

2001 NORTHWEST 22 STREET
POMPANO BEACH, FL 33069

Ship To:
R J SULLIVAN CORPORATION

2001 NORTHWEST 22 STREET
POMPANO BEACH, FL 33069

Job:

RFQ#

Contact: JASON BUCKWALTER
Phone#: 954-975-0388
Fax: 954-975-3333

Ship Via: BEST WAY POSSIBLE
FOB / Delivery ARO: SHIPPING POINT
Frt-Terms: PREPAID & CHARGE

Product/Description	Quantity	Price	U/M	Extension
[redacted]				
[redacted]				
800-010 1" PIPE P/E PVC SCH80	40	1.25	FT	50.00
[redacted]				
[redacted]				
806-010S 1" 90 ELBOW S PVC SCH80	3	2.13	EA	6.39
[redacted]				
[redacted]				
[redacted]				
[redacted]				
836-010S 1" ADAPTER MPTxS PVC SCH80	2	4.18	EA	8.36
[redacted]				

Continued

Harrington Industrial Plastics
5251 Powerline Road
Fort Lauderdale FL 33309
954-351-0088
954-351-0300 Fax

Quotation# 04443235
Written: KAA
Quote Date 04/12/23
Expire Date 04/26/23
Page 2 OF 2

Product/Description	Quantity	Price	U/M	Extension
[redacted]				

Subtotal for PCO #043 = $64.75

Merchandise	Tax	Est.Freight / Handling	Net Quote Total
3,167.42	221.70	150.00	3,539.12

Thanks For Thinking Harrington.
Respectfully Kevin A. Abercrombie
All Quotations are subject to review upon placement of order.
Freight/Handling and applicable taxes if not listed above will be added.
Harrington standard terms and conditions apply to this quote.

McDade Waterworks, Inc.

Post Office Box 16039 - Tampa, FL 33687-6039
(813) 740-1144 - FAX (813) 627-9387

December 28, 2023

Serving the Water & Wastewater Plant Industry for over 30 Years, Please visit us at:

R.J. Sullivan Corp.
Attn: Jason Buckwalter

See

Project Name: Palm Bay SRWRF PCO #043 - Hose Station at PDLS
McDade Project #: P20-232
Bid Date: N/A
Addendum: N/A
ARRA, AIS, or Domestic Requirement - Yes

BID ITEM	QTY	SIZE	DESCRIPTION	WEIGHT EACH	UNIT $	EXT $
	1		HOSE VALVE SUPPORT/STIFFENER CONSISTING OF ALUM 1/4" X 3" X 4" ANGLE STIFFENER SUPPORT AT 02'-00" TALL, ANGLE MADE FROM STITCH WELDED FLAT BAR, 1/4" X 4" X 10" BASE PLATE W/ (4) 1/2" HOLES FOR ANCHORS (2)316SS U-BOLTS (DETAIL 3/P-28)		$366.67	$366.67
	1		SIGN POST CONSISTING OF 2" ALUM PIPE 3'-6" LONG WITH CAP WELDED ON TOP AND 5" X 5" X 1/4" WELDED ALUM BASE PLATE WITH (4) 1/2" HOLES FOR ANCHORS (HOLES AND HARDWARE FOR SIGN BY OTHERS) (DETAIL 3/P-28)		$326.67	$326.67
	1		ALUM POST MOUNTED HOSE RACK (PER DETAIL 4 SHEET P-28)(INCLUDES 2" POST W/ 1/4" X 4" X 5" BASE PLATE)		$1,262.86	$1,262.86
	1	04" X 04"	C153 MJ TEE (C/L, BC) DOMESTIC	32	$138.79	$138.79
	1	04"	C153 MJ PLUG W/ 1" TAP (C/L, BC) DOMESTIC		$215.34	$215.34
	1	04"	C153 MJ LP SLEEVE (C/L, BC) DOMESTIC	22	$96.74	$96.74
	4	04"	MEGALUG W/ ACCY SET FOR DIP	11.6	$47.42	$189.68
	1	04"	C153 MJ BOLT & GASKET SET	4	$26.81	$26.81
	1	01"	THRD BRONZE NRS GATE VALVE LEAD FREE		$40.13	$40.13
	1		50' LONG, 1" DIAMETER (0.47 LB/LF) ABRASION & WEATHER RESISTANT EPDM RED COVER RAYON BRAIDED HOSE, AS MANUFACTURED BY AMAZON HOSE & RUBBER CO. OR EQUAL, DETAIL 3/P-28		$282.86	$282.86
	1	01"	1" BRASS MNPT X HOSE BARB, MANUFACTURED BY AMAZON HOSE & RUBBER CO. OR EQUAL, DETAIL 3/P-28		$12.91	$12.91
	1	01"	1" HOSE SHUTOFF VALVE, MANUFACTURED BY AMAZON HOSE & RUBBER CO. OR EQUAL, DETAIL 3/P-28		$31.08	$31.08
	1	01"	1" BRASS PLAIN HOSE NOZZLE, MANUFACTURED BY AMAZON HOSE & RUBBER CO. OR EQUAL, DETAIL 3/P-28		$24.79	$24.79
	1	LUMP SUM	FREIGHT TO JOB SITE		$500.00	$500.00

ESTIMATED LEAD TIME ON MATERIALS:

1. **DUCTLE IRON RUN PIPE: 30-36 WKS**
2. **DUCTILE IRON MJ & FLANGE FITTINGS: STOCK - 20 WKS**
3. **DUCTILE IRON FABRICATED PIPE: 8-12 WKS**
4. **MJ RESTRAINTS: STOCK - 16 WKS**
5. **GATE VALVE: 16-24 WKS**

TOTAL THIS BID ITEM - TAX NOT INCLUDED **$3,515.33**

DUCTILE TOTAL ALL BID ITEM - TAX NOT INCLUDED	**54.00**	**$450.87**
RESTRAINT TOTAL ALL BID ITEM - TAX NOT INCLUDED	**15.60**	**$216.49**

BID ITEM	QTY	SIZE	DESCRIPTION	WEIGHT EACH	UNIT $	EXT $
			VALVE TOTAL ALL BID ITEM - TAX NOT INCLUDED			$40.13
			MISC TOTAL ALL BID ITEM - TAX NOT INCLUDED			$2,807.84
			GRAND TOTAL ALL BID ITEM - TAX NOT INCLUDED			$3,515.33

Notes:

1 All Ductile Iron MJ Fitting Quoted C153 (Compact)
2 All Fitting and Valves Quoted Less Accessories
3 All Buried Ductile Iron Pipe and MJ Fitting Quoted Bituminous Coated
4 All Flange Pipe and Fitting Quoted Prime Coated
5 All Ductile Iron Pipe and Fitting Quoted Cement Lined
6 All Ductile Iron Fitting (MJ & Flange) Quoted Are Domestically Sourced
7 Escalation - Buried Pipe only (PO & RJ)
Buried pipe firm if released in full no later 05-15-2023. Pipe released after 05-15-2023 will be re-quoted (negotiated).

Escalation - Fab and Fittings
If signed purchase order agreement is acceptable to both parties within 30 days of quotation, Ductile Iron Pipe, Fittir and Fabrication prices will be held firm thru 09-30-2023.
From 10-01-2023 - 03-31-2024 a 5% unit price increase will be in effect for all releases to jobsite.
From 04-01-2024 - 09-30-2024 a 5% additional unit price increase will be in effect for all releases to jobsite.
All releases to jobsite after 10-01-2024 will be based on new quoted prices at that time.

8 At this time US Pipe and American are not producing fittings 24" and smaller.
Fittings are only made by Fitting Manufactures and brands are blended when we ship projects based on availability at time of order.
9 Due to the volatile raw market All C-900 PVC, C-905 PVC, HDPE, SDR 35, Sch 80 PVC, Sch 40 PVC, Stainless Steel, Copper & Brass Pipe, Fittings, Valves, etc. will/may need to be re-quoted at the time of purchase. Pricing Subject to Availability.
*** PVC prices are good till 05-02-2023.
McDade Waterworks, Inc. reserves the right to apply "Price in Effect" at time of delivery due to shortages and/or further "Force Majeure" declarations by manufacturer(s). McDade Waterworks, Inc will not be responsible for industry price changes or shortages beyond our control.
11 All valve boxes quoted less extension stem unless noted otherwise.
12 Flange Accessories Set Prices are Firm for 14 Days from Bid Date, & Must Ship Within 28 Working Days from Bid Date.
13 Pipe Supports - Do not include engineering calculations (ie. wind, seismic, etc.). We can recommend someone who can provide this information if requested.
14 Line drawings are not included. If needed add $1,000.00 per sheet.
15 No Spare Parts for any components on take-off are included, unless noted otherwise.
16 Kennedy Valve warranty for project is (1) year from date of shipment. Extended warranty can be purchased for a additional 1% of the purchase price for each additional year warranty up to 3 year maximum from date of shipment.

***** DISCLAIMER:***
McDade Waterworks, Inc. reserves the right to increase prices and/or change escalation terms at any time based on the potential of continued cost volatility.

Confidentiality. Both McDade and Customer agree that the terms of this quotation, including the attached pricing are confidential and shall be held in strict confidence by both parties and may not be disclosed unless required by law. Customer agrees not to post or publicly display the terms or the pricing. Customer also agrees that any discussions or negotiations regarding the attached pricing or any changes thereto (including but not limited to future pricing offerings) are also confidential and are pursuant to this provision of confidentiality.

The above quotation is **our** interpretation of the plans and specifications and should be reviewed by **your** firm for accuracy. Prices do not include valve boxes, ext. stems, wrenches, start-up services, etc. unless specifically noted in our quotation. Prices are based on full freight allowed truckload shipments to the project. Additional materials ordered will be furnished on a case by case basis.

Terms: Net 30 Days
FOB: S/P - FFA to Jobsite (Based on Terms Above)

Please call should you have any questions or need any additional pricing.

Sincerely,

Christian Fracchia

South Regional Water Reclamation Facility
PCO #044 - Potable Water Piping Modifications

Labor & Materials

Superintendent	240 MH @ $140/MH	$	33,600.00
Foreman	240 MH @ $100/MH	$	24,000.00
Laborer	480 MH @ $75/MH	$	36,000.00
Materials (See Attached List)		$	47,785.32
	Subtotal:	**$**	**141,385.32**
	5% Contractor's Fee: (Agreement, Article 14.4.1.1)	**$**	**7,069.27**
	Contractor Total:	**$**	**148,454.59**

Field Services

Surveyor	$	2,500.00
Testing Lab (Densities - 9 sets @ $200/set)	$	1,800.00
Testing Lab (Bacteriological - 2 sets @ $300/set)	$	600.00
Subtotal:	**$**	**4,900.00**
5% Contractor's Fee: (Agreement, Article 14.4.1.1)	**$**	**245.00**
Subcontractor Total:	**$**	**5,145.00**

Supplemental

Equipment		
Excavator - 6 weeks @ $2,500/week	$	15,000.00
Front End Loader - 6 weeks @ $1,500/week	$	9,000.00
Plate Compactor - 4 weeks @ $500/week	$	2,000.00
Roller - 1 week @ $1,400/week	$	1,400.00
Tax on Materials (7.0%)	$	3,344.97
Additional Bond & Insurance	$	71,946.23
Subtotal:	**$**	**102,691.20**
0% Contractor's Fee: (Agreement, Article 14.4.1.2)	**$**	**-**
Other Total:	**$**	**102,691.20**

Credits

None	$	-
Subtotal:	**$**	**-**
5% Contractor's Fee: (Agreement, Article 14.4.1.3 & 14.4.1.4)	**$**	**-**
Credits Total:	**$**	**-**

PCO #044 Total:	**$**	**256,290.79**
Additional Contract Time Required: 294 days		

Additional Materials

Supplier	Quantity	Item	Unit	Total
Harrington	1	PVC Pipe & Fittings	$ 78.89	$ 78.89
McDade Waterworks	1	Pipe, Fittings, and Accessories	$ 45,625.29	$ 45,625.29
R.J. Sullivan Corp.	314	Diesel Fuel, Gallons	$ 4.717	$ 1,481.14
R.J. Sullivan Corp.	1	Anchors, Pressure Testing, Pipe Encasement Tape, Concrete & Accessories at Valve Box, Pipe Cutting Blades	$ 600.00	$ 600.00
			Total:	**$ 47,785.32**

Harrington Industrial Plastics LLC

Harrington Industrial Plastics
5251 Powerline Road
Fort Lauderdale FL 33309

Phone: **954-351-0088** **Fax:** **954-351-0300**

Attention: JASON BUCKWALTER

Company: R J SULLIVAN CORPORATION

To: KABERCROMBIE@HIPCO.COM

From: Kevin A. Abercrombie

Subject: QUOTE 04443235

Memo:

Harrington Industrial Plastics
5251 Powerline Road
Fort Lauderdale FL 33309
954-351-0088
954-351-0300 Fax

Quotation#: 04443235
Written: KAA
Quote Date: 04/12/23
Expire Date: 04/26/23
Page: 1 OF 2

Quotation

053716
R J SULLIVAN CORPORATION

2001 NORTHWEST 22 STREET
POMPANO BEACH, FL 33069

Ship To:
R J SULLIVAN CORPORATION

2001 NORTHWEST 22 STREET
POMPANO BEACH, FL 33069

Job:

RFQ#

Contact: JASON BUCKWALTER
Phone#: 954-975-0388
Fax: 954-975-3333

Ship Via: BEST WAY POSSIBLE
FOB / Delivery ARO: SHIPPING POINT
Frt-Terms: PREPAID & CHARGE

Product/Description	Quantity	Price	U/M	Extension
[redacted]				
[redacted]				
[redacted]				
800-012 1-1/4" PIPE P/E PVC SCH80	20	1.81	FT	36.20
[redacted]				
[redacted]				
806-012S 1-1/4" 90 ELBOW S PVC SCH80	4	2.86	EA	11.44
[redacted]				
[redacted]				
837-250S 2"x1-1/4" BUSHING SPIGxS PVC SCH80	1	5.27	EA	5.27
[redacted]				
836-012S 1-1/4" ADAPTER MPTxS PVC SCH80	1	4.89	EA	4.89

Continued

Harrington Industrial Plastics
5251 Powerline Road
Fort Lauderdale FL 33309
954-351-0088
954-351-0300 Fax

Quotation# 04443235
Written: KAA
Quote Date 04/12/23
Expire Date 04/26/23
Page 2 OF 2

Product/Description	Quantity	Price	U/M	Extension
836-020S 2" ADAPTER MPTxS PVC SCH80	1	10.16	EA	10.16
[redacted]				
897-012S 1-1/4" UNION S PVC EPDM SCH80	1	10.93	EA	10.93
[redacted]				
[redacted]				
[redacted]				
[redacted]				

Subtotal for PCO #044 = $78.89

Merchandise	Tax	Est.Freight / Handling	Net Quote Total
3,167.42	221.70	150.00	3,539.12

Thanks For Thinking Harrington.
Respectfully Kevin A. Abercrombie
All Quotations are subject to review upon placement of order.
Freight/Handling and applicable taxes if not listed above will be added.
Harrington standard terms and conditions apply to this quote.

McDade Waterworks, Inc.

Post Office Box 16039 - Tampa, FL 33687-6039
(813) 740-1144 - FAX (813) 627-9387

December 28, 2023

Serving the Water & Wastewater Plant Industry for over 30 Years, Please visit us at:

R.J. Sullivan Corp.
Attn: Jason Buckwalter

See

Project Name: Palm Bay SRWRF PCO #044 - Potable Water Piping Modifications
McDade Project #: P20-232
Bid Date: N/A
Addendum: N/A
ARRA, AIS, or Domestic Requirement - Yes

BID ITEM	QTY	SIZE	DESCRIPTION	WEIGHT EACH	UNIT $	EXT $
	1		EMERGENCY SHOWER & EYEWASH, GUARDIAN MODEL G1991 OR EQUAL WITH FLOW SWITCH, DETAIL 2/P-28		$2,701.80	$2,701.80
	20	04"	TYTON JOINT CLASS 350 DIP (C/L, BC)	10.9	$43.45	$869.00
	620	06"	TYTON JOINT CLASS 350 DIP (C/L, BC)	16	$29.71	$18,420.20
	2	06"	C153 MJ 90 ELL (C/L, BC) DOMESTIC	39	$164.03	$328.06
	4	06" X 06"	C153 MJ TEE (C/L, BC) DOMESTIC	56	$235.53	$942.12
	1	04"	C153 MJ PLUG W/ 2" TAP (C/L, BC) DOMESTIC	10	$101.78	$101.78
	1	06" X 04"	C153 MJ TEE (C/L, BC) DOMESTIC	46	$210.29	$210.29
	1	06" X 04"	C153 MJ CONCENTRIC REDUCER (C/L, BC) DOMESTIC	24	$95.89	$95.89
	1	06"	C153 MJ LP SLEEVE (C/L, BC) DOMESTIC	29	$143.84	$143.84
	31	06"	MEGALUG W/ ACCY SET FOR DIP	17.5	$59.78	$1,853.18
	1	04"	C153 MJ BOLT & GASKET SET	4	$26.81	$26.81
	27	06"	SBR FIELD LOK GASKET		$131.70	$3,555.90
	3	06"	MJ RW NRS GATE VALVE, C515, DI BODY, 304SS STEM, & EPDM DISC		$895.80	$2,687.40
	3	06"	6" FIRE HYDRANT, POTABLE WATER, 4' DEPTH OF BURIED (SIMILAR TO 02661-2.01H. & 2.02I.)		$3,647.06	$10,941.18
	3	19" - 22"	CI ADJUSTABLE VALVE BOX W/ LID FOR WATER (DOMESTIC)		$194.23	$582.69
	3	LAY FLAT 20"	POLYWRAP FOR 3"-8" (BLUE,CONTINUOUS) (300' ROLL)		$250.02	$750.06
	1	04'-00"	VALVE STEM EXTENSION, 4'-0" LONG (15200-2.09B)		$300.00	$300.00
	1	03" X 1000'	METALLIC DECTECTOR TAPE, BLUE (FIG. 1/C-34)		$48.97	$48.97
	7		EMS MARKER BALL (FIG. 1/C-34)		$45.16	$316.12
	1	LUMP SUM	FREIGHT TO JOB SITE		$750.00	$750.00

ESTIMATED LEAD TIME ON MATERIALS:

1. **DUCTLE IRON RUN PIPE: 30-36 WKS**
2. **DUCTILE IRON MJ & FLANGE FITTINGS: STOCK - 20 WKS**
3. **DUCTILE IRON FABRICATED PIPE: 8-12 WKS**
4. **MJ RESTRAINTS: STOCK - 16 WKS**
5. **GATE VALVE: 16-24 WKS**

TOTAL THIS BID ITEM - TAX NOT INCLUDED		**$45,625.29**
DUCTILE TOTAL ALL BID ITEM - TAX NOT INCLUDED	**230.90**	**$24,667.08**
RESTRAINT TOTAL ALL BID ITEM - TAX NOT INCLUDED	**21.50**	**$1,879.99**
VALVE TOTAL ALL BID ITEM - TAX NOT INCLUDED		**$13,628.58**
MISC TOTAL ALL BID ITEM - TAX NOT INCLUDED		**$5,449.64**
GRAND TOTAL ALL BID ITEM - TAX NOT INCLUDED		**$45,625.29**

Notes:

1 **All Ductile Iron MJ Fitting Quoted C153 (Compact)**

BID ITEM	QTY	SIZE	DESCRIPTION	WEIGHT EACH	UNIT $	EXT $

2 All Fitting and Valves Quoted Less Accessories
3 All Buried Ductile Iron Pipe and MJ Fitting Quoted Bituminous Coated
4 All Flange Pipe and Fitting Quoted Prime Coated
5 All Ductile Iron Pipe and Fitting Quoted Cement Lined
6 All Ductile Iron Fitting (MJ & Flange) Quoted Are Domestically Sourced
7 Escalation - Buried Pipe only (PO & RJ)
Buried pipe firm if released in full no later 05-15-2023. Pipe released after 05-15-2023 will be re-quoted (negotiated).

Escalation - Fab and Fittings
If signed purchase order agreement is acceptable to both parties within 30 days of quotation, Ductile Iron Pipe, Fittir and Fabrication prices will be held firm thru 09-30-2023.
From 10-01-2023 - 03-31-2024 a 5% unit price increase will be in effect for all releases to jobsite.
From 04-01-2024 - 09-30-2024 a 5% additional unit price increase will be in effect for all releases to jobsite.
All releases to jobsite after 10-01-2024 will be based on new quoted prices at that time.

8 At this time US Pipe and American are not producing fittings 24" and smaller. Fittings are only made by Fitting Manufactures and brands are blended when we ship projects based on availability at time of order.
9 Due to the volatile raw market All C-900 PVC, C-905 PVC, HDPE, SDR 35, Sch 80 PVC, Sch 40 PVC, Stainless Steel, Copper & Brass Pipe, Fittings, Valves, etc. will/may need to be re-quoted at the time of purchase. Pricing Subject to Availability. * PVC prices are good till 05-02-2023.**
10 McDade Waterworks, Inc. reserves the right to apply "Price in Effect" at time of delivery due to shortages and/or further "Force Majeure" declarations by manufacturer(s). McDade Waterworks, Inc will not be responsible for industry price changes or shortages beyond our control.
11 All valve boxes quoted less extension stem unless noted otherwise.
12 Flange Accessories Set Prices are Firm for 14 Days from Bid Date, & Must Ship Within 28 Working Days from Bid Date.
13 Pipe Supports - Do not include engineering calculations (ie. wind, seismic, etc.). We can recommend someone who can provide this information if requested.
14 Line drawings are not included. If needed add $1,000.00 per sheet.
15 No Spare Parts for any components on take-off are included, unless noted otherwise.
16 Kennedy Valve warranty for project is (1) year from date of shipment. Extended warranty can be purchased for a additional 1% of the purchase price for each additional year warranty up to 3 year maximum from date of shipment.

***** DISCLAIMER:***
McDade Waterworks, Inc. reserves the right to increase prices and/or change escalation terms at any time based on the potential of continued cost volatility.

Confidentiality. Both McDade and Customer agree that the terms of this quotation, including the attached pricing are confidential and shall be held in strict confidence by both parties and may not be disclosed unless required by law. Customer agrees not to post or publicly display the terms or the pricing. Customer also agrees that any discussions or negotiations regarding the attached pricing or any changes thereto (including but not limited to future pricing offerings) are also confidential and are pursuant to this provision of confidentiality.

The above quotation is **our** interpretation of the plans and specifications and should be reviewed by **your** firm for accuracy. Prices do not include valve boxes, ext. stems, wrenches, start-up services, etc. unless specifically noted in our quotation. Prices are based on full freight allowed truckload shipments to the project. Additional materials ordered will be furnished on a case by case basis.

Terms: Net 30 Days
FOB: S/P - FFA to Jobsite (Based on Terms Above)

Please call should you have any questions or need any additional pricing.

Sincerely,

Christian Fracchia

South Regional Water Reclamation Facility
PCO #046 - Coating Cost Increase

Labor & Materials

Superintendent	$140/MH	$	-
Foreman	$100/MH	$	-
Laborer	$75/MH	$	-
Materials (See Attached List)		$	-
	Subtotal:	**$**	**-**
	5% Contractor's Fee: (Agreement, Article 14.4.1.1)	**$**	**-**
	Contractor Total:	**$**	**-**

Field Services

Universal Painting ($5,795 for Inlet Piping in 3MG Tank + $0.00 additional cost for Biological Process Structure Coatings + $24,073 for Plant Drain Lift Station Coating		$	29,868.00
	Subtotal:	**$**	**29,868.00**
	5% Contractor's Fee: (Agreement, Article 14.4.1.1)	**$**	**1,493.40**
	Subcontractor Total:	**$**	**31,361.40**

Supplemental

Equipment		$	-
Tax on Materials (7.0%)		$	-
Additional Bond & Insurance		$	359.91
	Subtotal:	**$**	**359.91**
	0% Contractor's Fee: (Agreement, Article 14.4.1.2)	**$**	**-**
	Other Total:	**$**	**359.91**

Credits

Superintendent	$140/MH	$	-
Foreman	$100/MH	$	-
Laborer	$75/MH	$	-
Material Credit (See Attached List)		$	-
	Subtotal:	**$**	**-**
	5% Contractor's Fee: (Agreement, Article 14.4.1.3 & 14.4.1.4)	**$**	**-**
	Credits Total:	**$**	**-**

PCO #046 Total: $ 31,721.31
Additional Contract Time Required: 0 days

Universal Painting Corporation

Fax Bid Form

To:

Company: **RJ Sullivan Corp**

Fax #: Phone #:

From: **Dave Billingsley** Direct Phone: (864) 844-3512 Email: dbillingsley@universalpainting.com

Bid Date 7-Sep-22 5:00 PM Submitted Date 7-Sep-22

Project: **Palm Bay SRWRF GST 20inch DI Inlet Pipe Added**

Addenda Received: **None**

Our Proposal includes the following:

Per Plans and Specification as shown for the Divisions listed below,

Base Bid by Specification Section:

Division	Description of Work (Listed by Area)	Amount
0 9900 - Painting,	GST 20" DI inlet pipe added	$5,795
	TOTAL PROPOSED AMOUNT	**$5,795**

Number	Description of Work		
	Based on shop primed pipe, with Tnemec N69	Labor	$4,064
	intermediate and topcoats.	Materials	$1,439
	Prevailing wages included (Davis Bacon).	Equipment	$292
	Pipe painted on ground, stainless hardware no touchup.		

	Yes	No		Yes	No
Bonds Included?		XX	Materials & Labor	XX	
Proposal valid for	30 days		Labor Only		XX
Per Plans & Specs?	XX		Terms 2% NET 10, NET 15	XX	
Certified MBE or WBE?		XX	Retainage Held @ 5%	XX	
Visited Job-Site?		XX	Crew Days		4

Confidential

Universal Painting Corporation

Fax Bid Form

Exclusions/Notes:

Proposal is based on a 40-hour workweek, Electricity and Water shall be supplied by others, Blast Media shall remain on ground, All Metals are to be prepared and shop primed by others, Exclude Aluminum in contact with concrete, Exclude all Manholes unless stated above, Exclude all labels other than stencils and color coding, Exclude all pipe interiors, All water retaining structures shall be clean and maintained dry by others, All crane lifts and assistance with unloading materials and equipment shall be provide by others, Exclude FRP Ducts, Piping & Scrubbers, Payments beyond 45 days is subject to a 1.5% Fee, This proposal and work scope shall become part of the contract and any unlisted work shall be done on a change order, Guarantee shall be 1 year from date of acceptance not to exceed 18 months from date of installation, Prevailing wages included, Exclude all below grade pipe, No Enviroment Controls, Exclude all lead and asbestos abatement , All damaged/abraded,field welded, and beyond maximun re-coat window items that were shop/factory pre-finished will be repaired on a T&M basis outside this scope, If factory/shop primed items are noncompatible with the specified paint system, the barrier coat or removal and re-prime shall be done on a T&M basis, Environmental Considerations: No containment of the work surfaces are planned. Heat for working in inclement weather has not been included. Ambient and Substrate temperature must be within manufacturers products data sheets, Includes standard provisions for General Liability and Workers Comp. If additional endorsements are required, additional costs will apply,

Above proposed amount is based on that all work must be substantially completed before 28-Jul-24
Any work beyond the above stated date may be subject to a price increase.

Confidential

4196 Merchant Plaza #459 Lake Ridge, VA 22192 Phone (864) 844-3512 Fax (863) 594-1905

Universal Painting Corporation

Fax Bid Form

To:

Company: **RJ Sullivan Corp**

Fax #: Phone #:

From: **Aaron Blok-Andersen** Direct Phone: (770) 480-5188 Email: aba@uipcl.com

Bid Date 21-Feb-24 2:00 PM Submitted Date 21-Feb-24

Project: **Palm Bay South WRF PCO Plant Drain Lift Station**

Addenda Received: **None**

Our Proposal includes the following:

Per Plans and Specification as shown for the Divisions listed below,

Base Bid by Specification Section:

Division	Description of Work (Listed by Area)	Amount
0 9900 - Painting,	Interior submerged concrete Wet Well (Tnemec G436 Perma-Shield)	$22,972
Mobilization, General Conditions, Submittals, Contingency and Punch Out		$1,101
	TOTAL PROPOSED AMOUNT	**$24,073**

Number	Description of Work		

	Yes	No		Yes	No
Bonds Included?		XX	Materials & Labor	XX	
Proposal valid for	30 days		Labor Only		XX
Per Plans & Specs?	XX		Terms 2% NET 10, NET 15	XX	
Certified MBE or WBE?		XX	Retainage Held @ 5%	XX	
Visited Job-Site?		XX	Crew Days		10

Confidential

Universal Painting Corporation

Fax Bid Form

Exclusions/Notes:

Proposal is based on a 40-hour workweek, Electricity and Water shall be supplied by others, Blast Media shall remain on ground, All Metals are to be prepared and shop primed by others, Exclude Aluminum in contact with concrete, Exclude all Manholes unless stated above, Exclude all labels other than stencils and color coding, Exclude all pipe interiors, All water retaining structures shall be clean and maintained dry by others, All crane lifts and assistance with unloading materials and equipment shall be provide by others, Exclude FRP Ducts, Piping & Scrubbers, Payments beyond 45 days is subject to a 1.5% Fee, This proposal and work scope shall become part of the contract and any unlisted work shall be done on a change order, Guarantee shall be 1 year from date of acceptance not to exceed 18 months from date of installation, Prevailing wages included, Exclude all below grade pipe, No Enviroment Controls, Exclude all lead and asbestos abatement , All damaged/abraded,field welded, and beyond maximun re-coat window items that were shop/factory pre-finished will be repaired on a T&M basis outside this scope, If factory/shop primed items are noncompatible with the specified paint system, the barrier coat or removal and re-prime shall be done on a T&M basis, Environmental Considerations: No containment of the work surfaces are planned. Heat for working in inclement weather has not been included. Ambient and Substrate temperature must be within manufacturers products data sheets, Includes standard provisions for General Liability and Workers Comp. If additional endorsements are required, additional costs will apply,

Above proposed amount is based on that all work must be substantially completed before 11-Jan-26
Any work beyond the above stated date may be subject to a price increase.

Confidential

4196 Merchant Plaza #459 Lake Ridge, VA 22192 Phone (864) 844-3512 Fax (863) 594-1905

South Regional Water Reclamation Facility
PCO #047 - Support Angles & Additional Wall Reinforcing at Upper Hollowcore Roof

Labor & Materials

Superintendent	4 MH @ $140/MH	$	560.00
Foreman	40 MH @ $100/MH	$	4,000.00
Laborer	80 MH @ $75/MH	$	6,000.00
Materials (See Attached List)		$	5,787.41
	Subtotal:	**$**	**16,347.41**
	5% Contractor's Fee: (Agreement, Article 14.4.1.1)	**$**	**817.37**
	Contractor Total:	**$**	**17,164.78**

Field Services

None		$	-
	Subtotal:	**$**	**-**
	5% Contractor's Fee: (Agreement, Article 14.4.1.1)	**$**	**-**
	Subcontractor Total:	**$**	**-**

Supplemental

Equipment (Scissor Lift)		$	791.90
Tax on Materials (7.0%)		$	405.12
Tax on Rental Equipment (7.0%)		$	55.43
Additional Bond & Insurance		$	211.36
	Subtotal:	**$**	**1,463.81**
	0% Contractor's Fee: (Agreement, Article 14.4.1.2)	**$**	**-**
	Other Total:	**$**	**1,463.81**

Credits

Superintendent	$140/MH	$	-
Foreman	$100/MH	$	-
Laborer	$75/MH	$	-
Material Credit		$	-
	Subtotal:	**$**	**-**
	5% Contractor's Fee: (Agreement, Article 14.4.1.3 & 14.4.1.4)	**$**	**-**
	Credits Total:	**$**	**-**

PCO #047 Total: $ 18,628.59
Additional Contract Time Required: 0 days

Additional Materials

Supplier	Quantity	Item	Unit	Total
Metals Depot	1	Rebar	$ 2,242.13	$ 2,242.13
GB Welding and Fabrication	1	4x4x5/16 316 SS Angles ($1,392.00/1.07)	$ 1,300.93	$ 1,300.93
Confast	1	3/4" Anchors ($1,496.35 + $58.00)	$ 1,554.35	$ 1,554.35
Maschmeyer	3	Grout for additional bond beams and filling of hollowcore cells, cy	$ 230.00	$ 690.00
			Total:	**$ 5,787.41**

ONLINE QUOTATION

Customer Service Hotline!

1-859-745-2650

QUOTE DETAILS						
#	**Item**	**Description**	**Qty**	**Size**	**Price**	**Total**
1.	RB34	3/4" Dia. (#6) A615 Grade 60 Steel Rebar	44	20 ft.	$44.43	$1,954.92
Order Comments / Delivery Instructions:					Sub-Total:	**$1,954.92**
					Fedex Freight FXF	**$287.21**
Delivery to Palm Bay, FL 32909 (1347 lbs.)					**Order Total:**	**$2,242.13**

Thanks for Your Inquiry!

To place an order for these items, simply Visit Us Online at www.MetalsDepot.com or Call Our Sales Desk at **1-859-745-2650.** We accept VISA, MASTERCARD, DISCOVER & AMERICAN EXPRESS, or Purchase Orders for approved accounts. Wire Transfer or PayPal for International orders.

From: garrett gbweldingandfab.com <garrett@gbweldingandfab.com>
Sent: Friday, August 25, 2023 11:51 AM
To: Mickey Bartlett <mbartlett@rjsullivancorp.com>
Subject: RE: Angle Brackets for R.J. Sullivan

Hey Mickey,
It'll be $1,392.00 for them in type 304 stainless steel.
Price includes tax.
Thanks!

Garrett Bisogno
G B Welding and Fabrication LLC
garrett@gbweldingandfab.com
ph: 954-967-2573
fx: 954-967-2574

From: Mickey Bartlett <mbartlett@rjsullivancorp.com>
Sent: Friday, August 25, 2023 10:20 AM
To: garrett gbweldingandfab.com <garrett@gbweldingandfab.com>
Subject: Angle Brackets for R.J. Sullivan

Good Morning Garrett,

Can you get 4 x 4 x 5/16 316SS angle that is "Made in America"? If so, I need a price for 11 of the attached angle brackets.

Thanks,

Mickey Bartlett
R.J. Sullivan Corp.
2001 NW 22nd St.
Pompano Beach, FL 33069
Office 954-975-0388
Cell 561-262-2515

Item	SKU	Price	Quantity	Total
ITW/RedHead® 3/4" x 4-3/4" Red Head Trubolt 304 Stainless Steel WW-3446, 10/Box	WAS34434;R	$299.27	5	$1,496.35

Total Items:	5
Subtotal:	$1,496.35
Shipping:	$58.00
Tax:	$108.80
Coupon Code:	Add Coupon
Grand total:	$1,663.15

14-18 ft. Scissor Lift, Electric, Narrow

Cat Class: 300-1500

WEB RATE ZERO EMISSIONS

Rates for GRANT VLKRIA, FL

$141/day **$281**/week **$568**/month

Estimated Cost **$791.90**

Item cost	$281.00
Transportation to/from jobsite	$505.28
Environmental fee	$5.62

PLEASE NOTE: This cost is estimated based on variables, like your location and the dates/times for the item you chose. Changing those variables could change your Estimated Cost.

South Regional Water Reclamation Facility
PCO #048 - Sleeves & Coupling for Piping Under 3MG Tank

Labor & Materials

Superintendent	4 MH @ $140/MH	$	560.00
Foreman	24 MH @ $100/MH	$	2,400.00
Laborer	72 MH @ $75/MH	$	5,400.00
Materials (See Attached List)		$	8,557.23
	Subtotal:	**$**	**16,917.23**
	5% Contractor's Fee: (Agreement, Article 14.4.1.1)	**$**	**845.86**
	Contractor Total:	**$**	**17,763.09**

Field Services

Surveyor		$	1,000.00
Testing Lab (Densities - 6 sets @ $200/set)		$	1,200.00
	Subtotal:	**$**	**2,200.00**
	5% Contractor's Fee: (Agreement, Article 14.4.1.1)	**$**	**110.00**
	Subcontractor Total:	**$**	**2,310.00**

Supplemental

Equipment			
• Excavator - 3 Days @ $833.33/Day		$	2,500.00
• Front End Loader - 3 Days @ $500/Day		$	1,500.00
• Plate Compactor - 3 Days @ $166.67/Day		$	500.00
• Dewatering Equipment - 3 Days @ $500/Day		$	1,500.00
Tax on Materials (7.0%)		$	599.01
Additional Bond & Insurance		$	306.09
	Subtotal:	**$**	**6,905.10**
	0% Contractor's Fee: (Agreement, Article 14.4.1.2)	**$**	**-**
	Other Total:	**$**	**6,905.10**

Credits

Superintendent	$140/MH	$	-
Foreman	$100/MH	$	-
Laborer	$75/MH	$	-
Material Credit (See Attached List)		$	-
	Subtotal:	**$**	**-**
	5% Contractor's Fee: (Agreement, Article 14.4.1.3 & 14.4.1.4)	**$**	**-**
	Credits Total:	**$**	**-**

PCO #048 Total:	**$**	**26,978.19**
Additional Contract Time Required: 0 days		

Additional Materials

Supplier	Quantity	Item	Unit	Total
McDade Waterworks	1	24" Megacoupling	$ 2,616.00	$ 2,616.00
McDade Waterworks	1	Freight for 24" Megacoupling	$ 173.49	$ 173.49
McDade Waterworks	1	20" MJ Sleeve	$ 3,121.61	$ 3,121.61
McDade Waterworks	2	20" Megalugs & Accessories	$ 519.77	$ 1,039.54
McDade Waterworks	1	Freight for 20" Megalugs	$ 150.00	$ 150.00
McDade Waterworks	1	8" MJ Sleeve	$ 656.86	$ 656.86
McDade Waterworks	2	8" Megalugs & Accessories	$ 84.30	$ 168.60
McDade Waterworks	1	Freight for 8" Items	$ 150.00	$ 150.00
R.J. Sullivan Corp.	102	Diesel Fuel, Gallons	$ 4.717	$ 481.13
			Total:	**$ 8,557.23**

INVOICE

Invoice Number: 116326

Invoice Date: Jul 21, 2023
Page: 1
Sales Order #: 61389

McDade Waterworks, Inc.

MCDADE WATERWORKS INC
PO BOX 16039
TAMPA, FL 33687-6039

Voice: (813) 740-1144
Fax: (813) 627-9387

Bill To:	Ship to:
RJ SULLIVAN CORPORATION 2001 N.W. 22ND STREET POMPANO BEACH, FL 33069	RJ SULLIVAN CORP @ SOUTHERN REGION WATER PLANT 250 OSMOSIS DR PALM BAY, FL 32909 JOB# 390-07

Customer ID	Customer PO	Payment Terms	
RJ SULLIVAN	390-07 (CO)	Net 30 Days	
Sales Rep ID	**Shipping Method**	**Ship Date**	**Due Date**
CHRIS STRATTON	EBAA-SEFL-PPA	7/20/23	8/20/23

Quantity	Item	Description	Backorder Qty	Unit Price	Amount
		CONTACT MICKEY @ 561.262.2515			
		*** MEGA COUPLING ADDITION REQUESTED BY MICKEY ***			
1.00		24" SERIES 380DI MEGA COUPLING FOR DIP #3824DISS16		2,616.00	2,616.00

Subtotal	2,616.00
Sales Tax	156.96
Freight	173.49
Total Invoice Amount	2,946.45
Payment/Credit Applied	
TOTAL	**2,946.45**

Thank you for your business!

Note: Please be aware a late fee of 1.5% per month will be applied to past due invoices.

McDade Waterworks, Inc.

INVOICE

Invoice Number: 117447

Invoice Date: Oct 24, 2023
Page: 1
Sales Order #: 62070

MCDADE WATERWORKS INC
PO BOX 16039
TAMPA, FL 33687-6039

Voice: (813) 740-1144
Fax: (813) 627-9387

Drop Shipment

Bill To:

RJ SULLIVAN CORPORATION
2001 N.W. 22ND STREET
POMPANO BEACH, FL 33069

Ship to:

RJ SULLIVAN CORP
@ SOUTHERN REGION WATER PLANT
250 OSMOSIS DR
PALM BAY, FL 32909
JOB# 390-07

Customer ID	Customer PO	Payment Terms	
RJ SULLIVAN	390-07	Net 60 Days	
Sales Rep ID	**Shipping Method**	**Ship Date**	**Due Date**
CHRIS STRATTON	STAR-SEFL-FFA	10/20/23	12/23/23

Quantity	Item	Description	Backorder Qty	Unit Price	Amount
		CONTACT: MICKEY @ 561-262-2515			
		*** ADDITIONAL FITTINGS & FIELD LOK GASKET REQUEST 10-18-23 ***			
	~~USFLGAS20~~	~~20" US PIPE FIELD LOCK GASKET~~	~~6.00~~	~~809.41~~	
~~1.00~~	~~1.2DCMJ4520~~	~~20" C153 MJ 45, 401 LINED, L/ACCYS, DOMESTIC~~		~~3,331.91~~	~~3,331.91~~
1.00	1.2DCMJSLP20	20" C153 MJ L/P SLEEVE L/ACCYS, 401 LINED, DOMESTIC		3,121.61	3,121.61
	~~USFLGAS04~~	~~4" US PIPE FIELD LOCK GASKET~~	~~30.00~~	~~104.92~~	

Subtotal	6,453.52
Sales Tax	387.21
Freight	
Total Invoice Amount	6,840.73
Payment/Credit Applied	
TOTAL	**6,840.73**

Thank you for your business!

Note: Please be aware a late fee of 1.5% per month will be applied to past due invoices.

McDade Waterworks, Inc.

Post Office Box 16039 - Tampa, FL 33687-6039
(813) 740-1144 - FAX (813) 627-9387

October 16, 2023

Serving the Water & Wastewater Plant Industry for over 30 Years, Please visit us at:

R.J. Sullivan Corp.
Attn: Jason Buckwalter

See

Project Name: Palm Bay SRWRF PCO #048 - Sleeves & Coupling for Piping Under 3MG Tank
McDade Project #: P20-232
Bid Date: N/A
Addendum: N/A
ARRA, AIS, or Domestic Requirement - Yes

BID ITEM	QTY	SIZE	DESCRIPTION	WEIGHT EACH	UNIT $	EXT $
	2	20"	MEGALUG W/ ACCY SET FOR DIP		$519.77	$1,039.54
	1	LUMP SUM	FREIGHT TO JOB SITE		$150.00	$150.00

ESTIMATED LEAD TIME ON MATERIALS:

MJ RESTRAINTS: STOCK - 16 WKS

TOTAL THIS BID ITEM - TAX NOT INCLUDED	$1,189.54
RESTRAINT TOTAL ALL BID ITEM - TAX NOT INCLUDED	$1,039.54
MISC TOTAL ALL BID ITEM - TAX NOT INCLUDED	$150.00
GRAND TOTAL ALL BID ITEM - TAX NOT INCLUDED	$1,189.54

Notes:

1 All Ductile Iron MJ Fitting Quoted C153 (Compact)
2 All Fitting and Valves Quoted Less Accessories
3 All Buried Ductile Iron Pipe and MJ Fitting Quoted Bituminous Coated
4 All Flange Pipe and Fitting Quoted Prime Coated
5 All Ductile Iron Pipe and Fitting Quoted Cement Lined
6 All Ductile Iron Fitting (MJ & Flange) Quoted Are Domestically Sourced
7 Escalation - Buried Pipe only (PO & RJ)
Buried pipe firm if released in full no later 12-31-2023. Pipe released after 12-31-2023 will be re-quoted (negotiated).

Escalation - Fab and Fittings
If signed purchase order agreement is acceptable to both parties within 30 days of quotation, Ductile Iron Pipe, Fittir
and Fabrication prices will be held firm thru 12-31-2023.
All releases to jobsite after 12-31-2024 will be based on new quoted prices at that time.
8 At this time US Pipe and American are not producing fittings 24" and smaller.
Fittings are only made by Fitting Manufactures and brands are blended when we
ship projects based on availability at time of order.
9 Due to the volatile raw market All C-900 PVC, C-905 PVC, HDPE, SDR 35, Sch 80 PVC,
Sch 40 PVC, Stainless Steel, Copper & Brass Pipe, Fittings, Valves, etc.
will/may need to be re-quoted at the time of purchase. Pricing Subject to Availability.
*** PVC prices are good till 12-31-2023.
McDade Waterworks, Inc. reserves the right to apply "Price in Effect" at time of delivery due to
shortages and/or further "Force Majeure" declarations by manufacturer(s). McDade
Waterworks, Inc will not be responsible for industry price changes or shortages beyond our control.
10 All valve boxes quoted less extension stem unless noted otherwise.
11 Flange Accessories Set Prices are Firm for 14 Days from Bid Date, &
Must Ship Within 28 Working Days from Bid Date.
12 Pipe Supports - Do not include engineering calculations (ie. wind, seismic, etc.). We can
recommend someone who can provide this information if requested.
13 Line drawings are not included. If needed add $1,000.00 per sheet.
14 No Spare Parts for any components on take-off are included, unless noted otherwise.

BID ITEM	QTY	SIZE	DESCRIPTION	WEIGHT EACH	UNIT $	EXT $

***** DISCLAIMER:***
McDade Waterworks, Inc. reserves the right to increase prices and/or change escalation terms at any time based on the potential of continued cost volatility.

Confidentiality. Both McDade and Customer agree that the terms of this quotation, including the attached pricing are confidential and shall be held in strict confidence by both parties and may not be disclosed unless required by law. Customer agrees not to post or publicly display the terms or the pricing. Customer also agrees that any discussions or negotiations regarding the attached pricing or any changes thereto (including but not limited to future pricing offerings) are also confidential and are pursuant to this provision of confidentiality.

The above quotation is **our** interpretation of the plans and specifications and should be reviewed by **your** firm for accuracy. Prices do not include valve boxes, ext. stems, wrenches, start-up services, etc. unless specifically noted in our quotation. Prices are based on full freight allowed truckload shipments to the project. Additional materials ordered will be furnished on a case by case basis.

Terms: Net 30 Days
FOB: S/P - FFA to Jobsite (Based on Terms Above)

Please call should you have any questions or need any additional pricing.

Sincerely,

Christian Fracchia

McDade Waterworks, Inc.

Post Office Box 16039 - Tampa, FL 33687-6039
(813) 740-1144 - FAX (813) 627-9387

November 15, 2023

Serving the Water & Wastewater Plant Industry for over 30 Years, Please visit us at:

R.J. Sullivan Corp.
Attn: Jason Buckwalter

See

Project Name: Palm Bay SRWRF PCO #048 - Sleeves & Coupling for Piping Under 3MG Tank
McDade Project #: P20-232
Bid Date: N/A
Addendum: N/A
ARRA, AIS, or Domestic Requirement - Yes

BID ITEM	QTY	SIZE	DESCRIPTION	WEIGHT EACH	UNIT $	EXT $
	1	08"	C153 MJ LP SLEEVE (401/L, BC) DOMESTIC		$656.86	$656.86
	2	08"	MEGALUG W/ ACCY SET FOR DIP		$84.30	$168.60
	2	08"	C153 MJ BOLT & GASKET SET (No Charge)		$0.00	$0.00
	1	LUMP SUM	FREIGHT TO JOB SITE		$150.00	$150.00

ESTIMATED LEAD TIME ON MATERIALS:

1 DUCTLE IRON RUN PIPE: 30-36 WKS
2 DUCTILE IRON MJ & FLANGE FITTINGS: STOCK - 20 WKS
3 DUCTILE IRON FABRICATED PIPE: 8-12 WKS
4 MJ RESTRAINTS: STOCK - 16 WKS

TOTAL THIS BID ITEM - TAX NOT INCLUDED	$975.46
DUCTILE TOTAL ALL BID ITEM - TAX NOT INCLUDED	$656.86
RESTRAINT TOTAL ALL BID ITEM - TAX NOT INCLUDED	$168.60
MISC TOTAL ALL BID ITEM - TAX NOT INCLUDED	$150.00
GRAND TOTAL ALL BID ITEM - TAX NOT INCLUDED	$975.46

Notes:

1 All Ductile Iron MJ Fitting Quoted C153 (Compact)
2 All Fitting and Valves Quoted Less Accessories
3 All Buried Ductile Iron Pipe and MJ Fitting Quoted Bituminous Coated
4 All Flange Pipe and Fitting Quoted Prime Coated
5 All Ductile Iron Pipe and Fitting Quoted Cement Lined
6 All Ductile Iron Fitting (MJ & Flange) Quoted Are Domestically Sourced
7 Escalation - Buried Pipe only (PO & RJ)
Buried pipe firm if released in full no later 12-31-2023. Pipe released after 12-31-2023 will be re-quoted (negotiated).

Escalation - Fab and Fittings
If signed purchase order agreement is acceptable to both parties within 30 days of quotation, Ductile Iron Pipe, Fittir
and Fabrication prices will be held firm thru 12-31-2023.
All releases to jobsite after 12-31-2024 will be based on new quoted prices at that time.
8 At this time US Pipe and American are not producing fittings 24" and smaller.
Fittings are only made by Fitting Manufactures and brands are blended when we
ship projects based on availability at time of order.
9 Due to the volatile raw market All C-900 PVC, C-905 PVC, HDPE, SDR 35, Sch 80 PVC,
Sch 40 PVC, Stainless Steel, Copper & Brass Pipe, Fittings, Valves, etc.
will/may need to be re-quoted at the time of purchase. Pricing Subject to Availability.
*** PVC prices are good till 12-31-2023.
McDade Waterworks, Inc. reserves the right to apply "Price in Effect" at time of delivery due to
shortages and/or further "Force Majeure" declarations by manufacturer(s). McDade
Waterworks, Inc will not be responsible for industry price changes or shortages beyond our control.
10 All valve boxes quoted less extension stem unless noted otherwise.

BID ITEM	QTY	SIZE	DESCRIPTION	WEIGHT EACH	UNIT $	EXT $

11 Flange Accessories Set Prices are Firm for 14 Days from Bid Date, & Must Ship Within 28 Working Days from Bid Date.
12 Pipe Supports - Do not include engineering calculations (ie. wind, seismic, etc.). We can recommend someone who can provide this information if requested.
13 Line drawings are not included. If needed add $1,000.00 per sheet.
14 No Spare Parts for any components on take-off are included, unless noted otherwise.

***** DISCLAIMER:***
McDade Waterworks, Inc. reserves the right to increase prices and/or change escalation terms at any time based on the potential of continued cost volatility.

Confidentiality. Both McDade and Customer agree that the terms of this quotation, including the attached pricing are confidential and shall be held in strict confidence by both parties and may not be disclosed unless required by law. Customer agrees not to post or publicly display the terms or the pricing. Customer also agrees that any discussions or negotiations regarding the attached pricing or any changes thereto (including but not limited to future pricing offerings) are also confidential and are pursuant to this provision of confidentiality.

The above quotation is **our** interpretation of the plans and specifications and should be reviewed by **your** firm for accuracy. Prices do not include valve boxes, ext. stems, wrenches, start-up services, etc. unless specifically noted in our quotation. Prices are based on full freight allowed truckload shipments to the project. Additional materials ordered will be furnished on a case by case basis.

Terms: Net 30 Days
FOB: S/P - FFA to Jobsite (Based on Terms Above)

Please call should you have any questions or need any additional pricing.

Sincerely,

Christian Fracchia

South Regional Water Reclamation Facility
PCO #049 - Bond & Insurance Costs Related to Contract Time Extension

Labor & Materials

Superintendent	$140/MH	$	-
Foreman	$100/MH	$	-
Laborer	$75/MH	$	-
Materials		$	-
	Subtotal:	**$**	**-**
	5% Contractor's Fee: (Agreement, Article 14.4.1.1)	**$**	**-**
	Contractor Total:	**$**	**-**

Field Services

None		$	-
	Subtotal:	**$**	**-**
	5% Contractor's Fee: (Agreement, Article 14.4.1.1)	**$**	**-**
	Subcontractor Total:	**$**	**-**

Supplemental

Equipment		$	-
Tax on Materials (7.0%)		$	-
Additional Bond & Insurance Premiums for 704 days		$	170,430.02
	Subtotal:	**$**	**170,430.02**
	0% Contractor's Fee: (Agreement, Article 14.4.1.2)	**$**	**-**
	Other Total:	**$**	**170,430.02**

Credits

Superintendent	$140/MH	$	-
Foreman	$100/MH	$	-
Laborer	$75/MH	$	-
Material Credit		$	-
	Subtotal:	**$**	**-**
	5% Contractor's Fee: (Agreement, Article 14.4.1.3 & 14.4.1.4)	**$**	**-**
	Credits Total:	**$**	**-**

PCO #049 Total:	**$**	**170,430.02**
Contract Time Granted in Change Orders to date: 704 days		

Current Dates

Current Ship Date for Electrical Gear:	8/1/2024
3 Weeks to arrive:	8/22/2024
1 Week to install:	9/2/2024
Current Substantial Completion:	9/20/2024
Time between Ready for Startup & Substantial Completion:	18

Revised Dates

Revised Ship Date for Electrical Gear:	11/26/2024
3 Weeks to arrive:	12/17/2024
1 Week to install + Holidays:	1/6/2025
Time between Ready for Startup & Substantial Completion:	18
Revised Substantial Completion:	1/24/2025
Difference between Revised SC & Current SC:	126

South Regional Water Reclamation Facility
PCO #050 - Addition of Fiber Optic Cable and Accessories

Labor & Materials

Superintendent	$140/MH	$	-
Foreman	$100/MH	$	-
Laborer	$75/MH	$	-
Materials (Kubota)		$	10,415.00
	Subtotal:	**$**	**10,415.00**
	5% Contractor's Fee: (Agreement, Article 14.4.1.1)	**$**	**520.75**
	Contractor Total:	**$**	**10,935.75**

Field Services

Sod/Restoration		$	2,000.00
Chinchor Electric, Inc.		$	18,106.68
	Subtotal:	**$**	**20,106.68**
	5% Contractor's Fee: (Agreement, Article 14.4.1.1)	**$**	**1,005.33**
	Subcontractor Total:	**$**	**21,112.01**

Supplemental

Equipment		$	-
Tax on Materials (7.0%)		$	729.05
Additional Bond & Insurance		$	376.15
	Subtotal:	**$**	**1,105.20**
	0% Contractor's Fee: (Agreement, Article 14.4.1.2)	**$**	**-**
	Other Total:	**$**	**1,105.20**

Credits

Superintendent	$140/MH	$	-
Foreman	$100/MH	$	-
Laborer	$75/MH	$	-
Material Credit			
	Subtotal:	**$**	**-**
	5% Contractor's Fee: (Agreement, Article 14.4.1.3 & 14.4.1.4)	**$**	**-**
	Credits Total:	**$**	**-**

PCO #050 Total:	**$**	**33,152.96**
Additional Contract Time Required: 0 days		

Palm Bay Fiber Optic Change Order

Chien, Tiffany <tiffany.chien@kubota.com> Fri, Mar 22, 2024 at 1:39 PM
To: Mickey Bartlett <mbartlett@rjsullivancorp.com>
Cc: "Supica, Damone" <damone.supica@kubota.com>

Mickey,

The change order pricing for the items below is $10,415:

- Cisco IE-2000-4TS-G-B, IE2000 Ethernet Switch, 4 CU, 2 SFP
- Includes fiber optic cable and terminations, two (2) termination boxes, two (2) SFP modules, one (1) Ethernet Switch
- Does not include installation (by contractor/electrician) or an Ethernet Switch at the existing control room

Let me know if you have any questions.

Thank you!
[Quoted text hidden]

Chinchor Electric, Inc.
1460 S. Leavitt Ave.
Orange City, FL 32763
P: 386-774-1020

Project Name: Palm Bay SRWRF | Change Order Description: Complete Fiber Run & pull fiber | Date 3/13/2024

				UNIT PRICES						TOTAL COSTS				
	Pay Item & Description	Basic Qty		MATL W/O Tax	Total Material W/O Tax	Crew Rate w/o Burden	Crew Rate w/Burden	SUB Price	Equip. Rate	MATL W/Tax	LABOR	SUBS	Equip	TOTAL COSTS
Item #	**Labor Cost**													
	Project Manager	1	HR		$ -	$ -	$ 95.00			$ -	$ 95.00	$ -	$ -	$ 95.00
	Superintendent	56	HR		$ -	$ -	$ 95.00			$ -	$ 5,320.00	$ -	$ -	$ 5,320.00
	Apprentice	56	HR		$ -	$ -	$ 85.00			$ -	$ 4,760.00	$ -	$ -	$ 4,760.00
		0	HR		$ -	$ -	$ -			$ -	$ -	$ -	$ -	$ -
		0	HR		$ -		$ -			$ -	$ -	$ -	$ -	$ -
		0	HR		$ -		$ -			$ -	$ -	$ -	$ -	$ -
		0	HR		$ -		$ -			$ -	$ -	$ -	$ -	$ -
		0	HR		$ -	$ -	$ -			$ -	$ -	$ -	$ -	$ -
		0	HR		$ -	$ -	$ -			$ -	$ -	$ -	$ -	$ -
		0	HR		$ -	$ -	$ -			$ -	$ -	$ -	$ -	$ -
		0	HR		$ -		$ -			$ -	$ -	$ -	$ -	$ -
		0	HR		$ -					$ -	$ -	$ -	$ -	$ -
		0	HR		$ -					$ -	$ -	$ -	$ -	$ -
					$ -		$ -			$ -	$ -	$ -	$ -	$ -
					$ -		$ -			$ -	$ -	$ -	$ -	$ -
					$ -		$ -			$ -	$ -	$ -	$ -	$ -
					$ -		$ -			$ -	$ -	$ -	$ -	$ -
	Pay Item & Description	Basic Qty		MATL W/O Tax	Total Material W/O Tax	Crew Rate w/o Burden	Crew Rate w/Burden	SUB Price	Equip. Rate	MATL W/Tax	LABOR	SUBS	Equip	TOTAL COSTS
Item #	**Material Breakdown**													
	PVC conduit and spacers	1	lot	$ 362.44	$ 362.44		$ -			$ 386.00	$ -	$ -	$ -	$ 386.00
	Rebar	600	ft	$ 0.75	$ 450.00		$ -			$ 479.25	$ -	$ -	$ -	$ 479.25
	Concrete	1	lot	$ 2,000.00	$ 2,000.00		$ -			$ 2,130.00	$ -	$ -	$ -	$ 2,130.00
					$ -		$ -			$ -	$ -	$ -	$ -	$ -
					$ -		$ -			$ -	$ -	$ -	$ -	$ -
	Pay Item & Description	Basic Qty		MATL W/O Tax	Total Material W/O Tax	Crew Rate w/o Burden	Crew Rate w/Burden	SUB Price	Equip. Rate	MATL W/Tax	LABOR	SUBS	Equip	TOTAL COSTS
Item #	**Equipment Cost**													
1	F-550	7	day		$ -		$ -		$ 69.14	$ -	$ -	$ -	$ 483.98	$ 483.98
		0			$ -		$ -			$ -	$ -	$ -	$ -	$ -
					$ -		$ -			$ -	$ -	$ -	$ -	$ -
	Pay Item & Description	Basic Qty		MATL W/O Tax	Total Material W/O Tax	Crew Rate w/o Burden	Crew Rate w/Burden	SUB Price	Equip. Rate	MATL W/Tax	LABOR	SUBS	Equip	TOTAL COSTS
Item #	**Hotel/Per-Diem/Travel**													
	Hotel/Per-Diem/Travel	1	lot	$ 2,450.00	$ 2,450.00		$ -			$ 2,609.25	$ -	$ -	$ -	$ 2,609.25
		0			$ -		$ -			$ -	$ -	$ -	$ -	$ -
TOTAL COSTS					**$ 5,262.44**					**$ 5,604.50**	**$ 10,175.00**	**$ -**	**$ 483.98**	**$ 16,263.48**
MARKUP - MATERIAL				10.0%						$ 560.45				$ 560.45
MARKUP - EQUIP				10.0%									$ 48.40	$ 48.40
MARKUP - LABOR				10.0%							$ 1,017.50			$ 1,017.50
	SUBCONTRACTOR MARKUP			5.0%								$ -		$ 130.46
SURTAX Rate				0.5%	$ 26.31									
SUBTOTAL										$ 6,164.95	$ 11,192.50	$ -	$ 532.38	$ 17,971.89
GENERAL LIABILITY & BOND									0.750%					$ 134.79
TOTAL COST THIS CHANGE														**$ 18,106.68**

11:29 AM Thu Oct 12 LTE 37%

Untitled

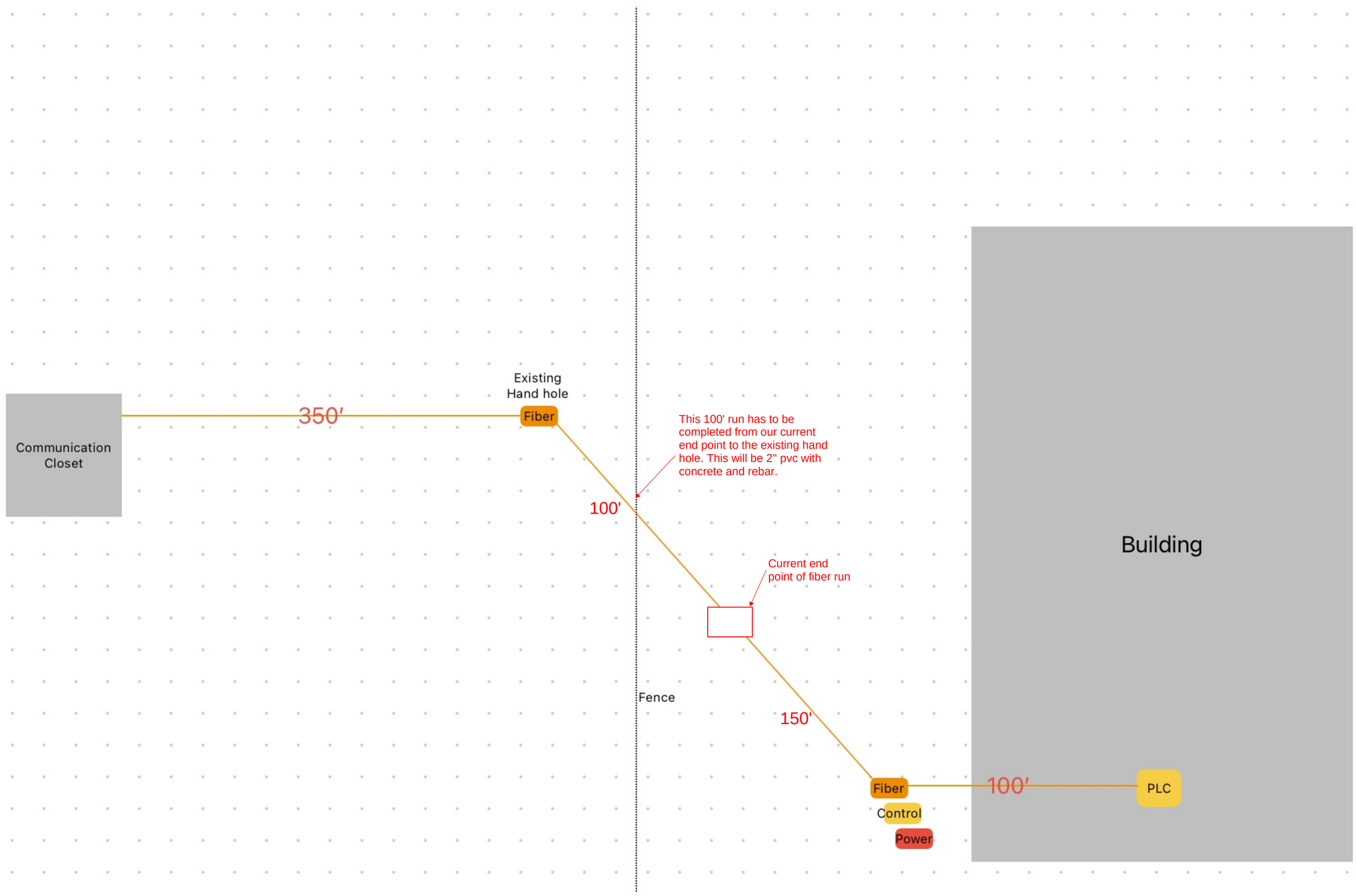

89%

From:	Chien, Tiffany
To:	Mickey Bartlett
Subject:	Re: Palm Bay - Status of Kubota RFI-05 (Plant Reuse Pumps and Ultrasonic Level Transmitters)
Date:	Tuesday, March 26, 2024 6:20:26 PM
Attachments:	Kubota.com Mail - Palm Bay Fiber Optic Change Order.pdf

---

Mickey,

The price for just the fiber optic cable and terminations, termination boxes, and SFP modules is $8,530 (no switch). As I mentioned, we can use the existing Ethernet switch in our control panel if that's the route the owner prefers.

On Tue, Mar 26, 2024 at 3:11 PM Mickey Bartlett <mbartlett@rjsullivancorp.com> wrote:

> Not yet. Any way you can break out the cost of the switch so I can submit it before they choose?
>
> Thanks,
>
> Mickey Bartlett
> R.J. Sullivan Corp
> 2001 NW 22nd St
> Pompano Beach, FL 33069
> Office- 954-975-0388
> Cell- 561-262-2515
>
> Sent from my Verizon, Samsung Galaxy Smartphone
>
> -------- Original message --------
> From: "Chien, Tiffany" <tiffany.chien@kubota.com>
> Date: 3/26/24 6:05 PM (GMT-05:00)
> To: Mickey Bartlett <mbartlett@rjsullivancorp.com>
> Subject: Re: Palm Bay - Status of Kubota RFI-05 (Plant Reuse Pumps and Ultrasonic Level Transmitters)
>
> Hi Mickey,
>
> Did you hear back as to whether the board reviewed and/or approved the change order?
>
> On Tue, Mar 12, 2024 at 11:43 AM Chien, Tiffany <tiffany.chien@kubota.com> wrote:
>
> > Mickey,
> >
> > Great, thank you.
> >
> > Please keep me posted.
> >
> > On Tue, Mar 12, 2024 at 11:27 AM Mickey Bartlett <mbartlett@rjsullivancorp.com> wrote:
> >
> > > Hi Tiffany,